s.r.l. GORLA
MORSETTERIE
MILANO

TECHNICAL OFFICE

T CONNECTOR
FOR DOUBLE Al CONDUCTOR RUN AND Cu STUD TAP

DRG. N. 65/AB/X

Rev.2 dated 31.08.23

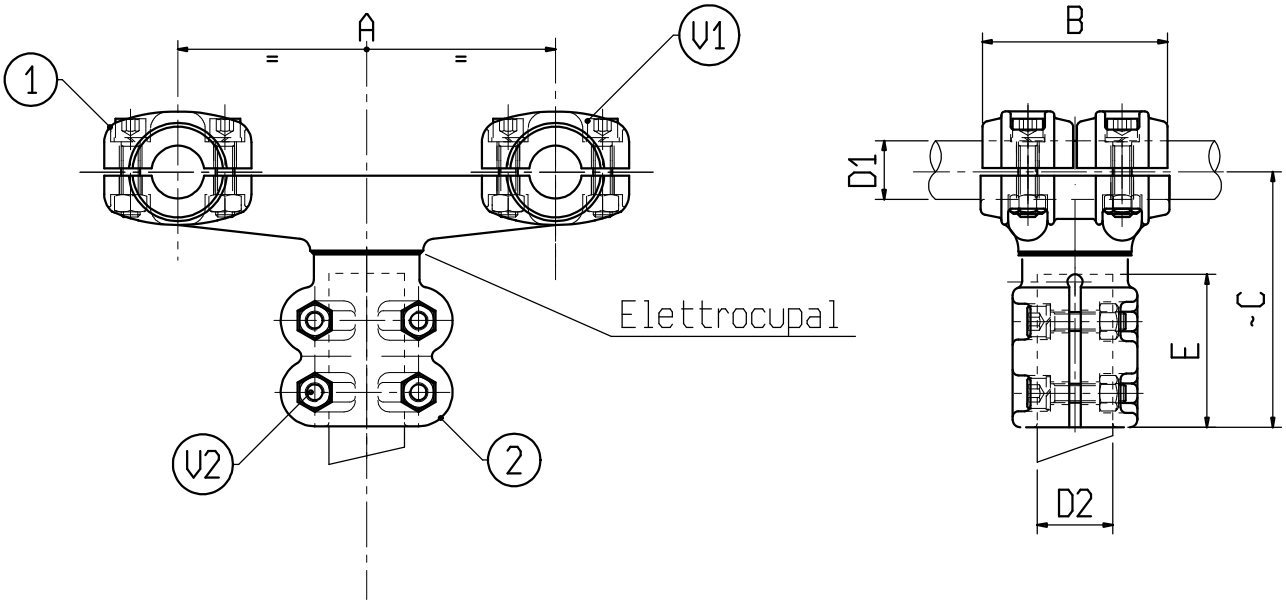

Material: 1 Aluminium alloy; 2 Copper alloy

Bolts: Stainless steel

X	ø CONDUCTOR		A	B	C	E	V1	V2	X	ø CONDUCTOR		A	B	C	E	V1	V2
	D1	D2								D1	D2						
C6716ABC	32-36	40	200	100	190	80	M10	M10									
C6716-50AB	32-36	50	200	100	200	80	M10	M10									
C0481AB	32-36	60	400	100	200	80	M10	M10									