s.r.l. GORLA
MORSETTERIE
MILANO

TECHNICAL OFFICE

STRAIGHT CONNECTOR
FOR Al FLAT
AND DOUBLE Al CONDUCTOR

DRG. N. 53/AA/X

Rev.2 dated 31.08.23

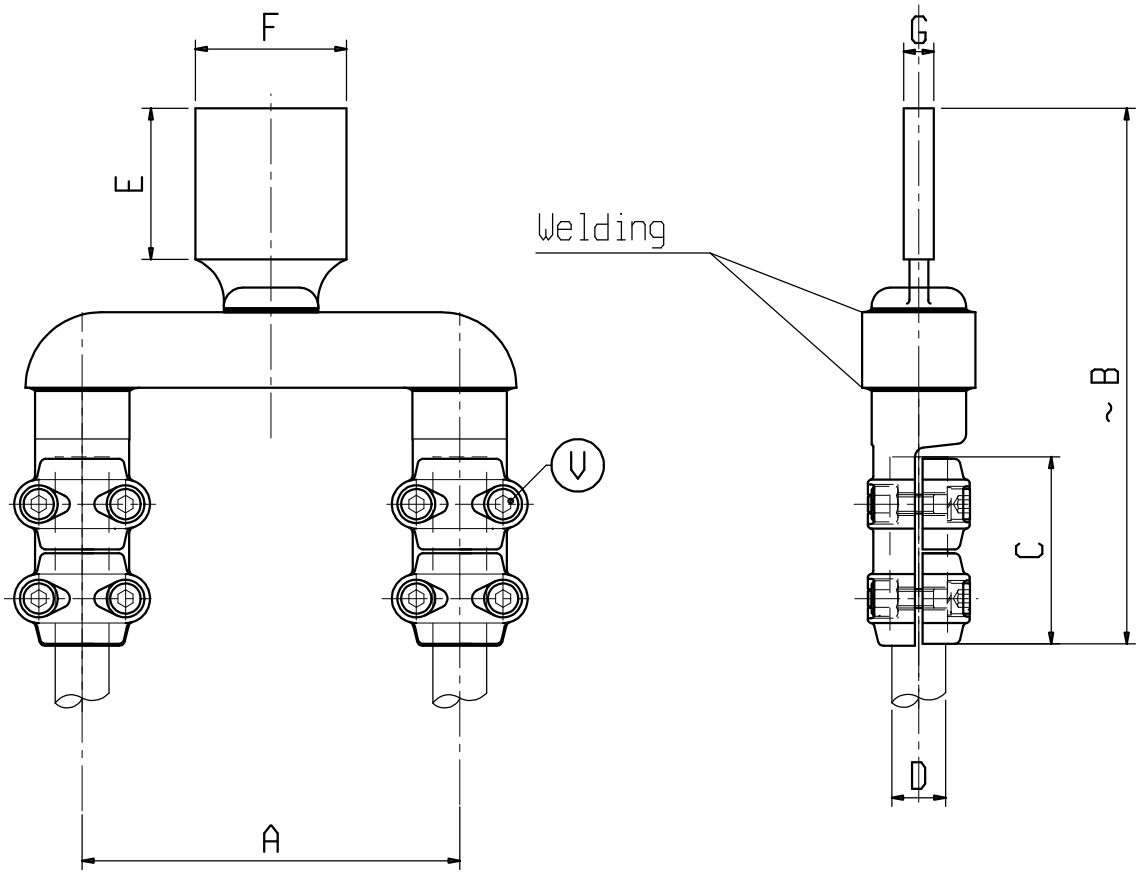

Material: Aluminium alloy
Bolts: Stainless steel

X	ø COND. D	A	B	C	E	F	G	V	X	ø COND. D	A	B	C	E	F	G	V
C 0145AA	20-25	200	305	100	100	100	14	M10									
C 0145-32AA	32-36	200	305	100	100	100	15	M10									