s.r.l. GORLA MORSETTERIE MILANO TECHNICAL OFFICE	90° SHACKLES	DRG. N. AT12/X Rev. 1 dated 28.02.14

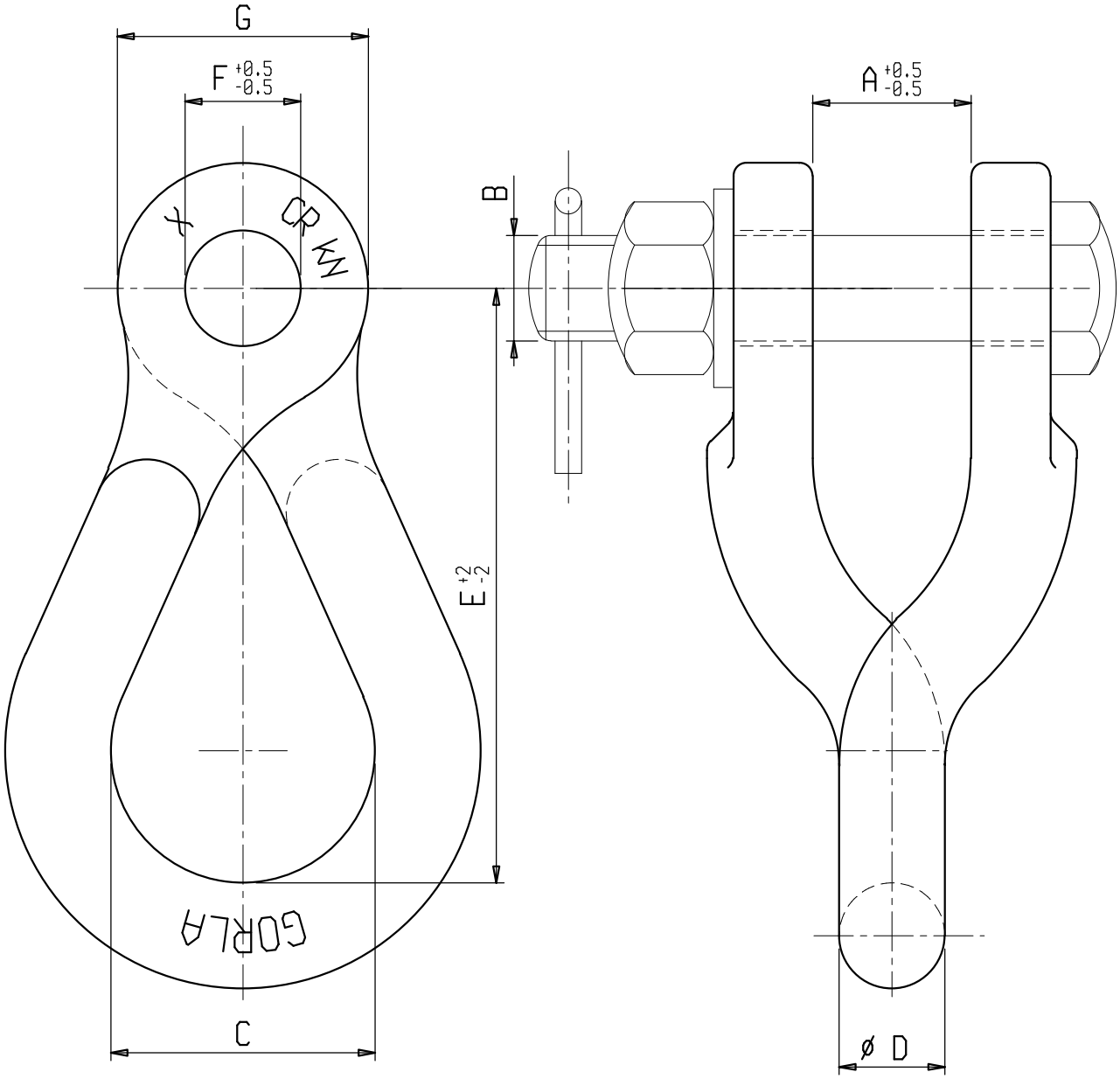

Material: Hot dip galvanized steel. Stainless steel pin

X	A	B	C	D	E	F	G	CR [kN]
LS 3878	24	M 16	40	16	90	17,5	45	120
LS 6924	24	M 20	36	20	90	21,5	48	210