s.r.l. GORLA
MORSETTERIE MILANO

TECHNICAL OFFICE

SOCKET EYE

FOR ARCING HORN FITTING

DRG. N.	AT17/X
SCALE	.
DRAWN	.
DATE	.
APPROVED	.

N.	DATE	UPDATES	DRAWN	APPROVED
.	.	.	.	.
	.	.		

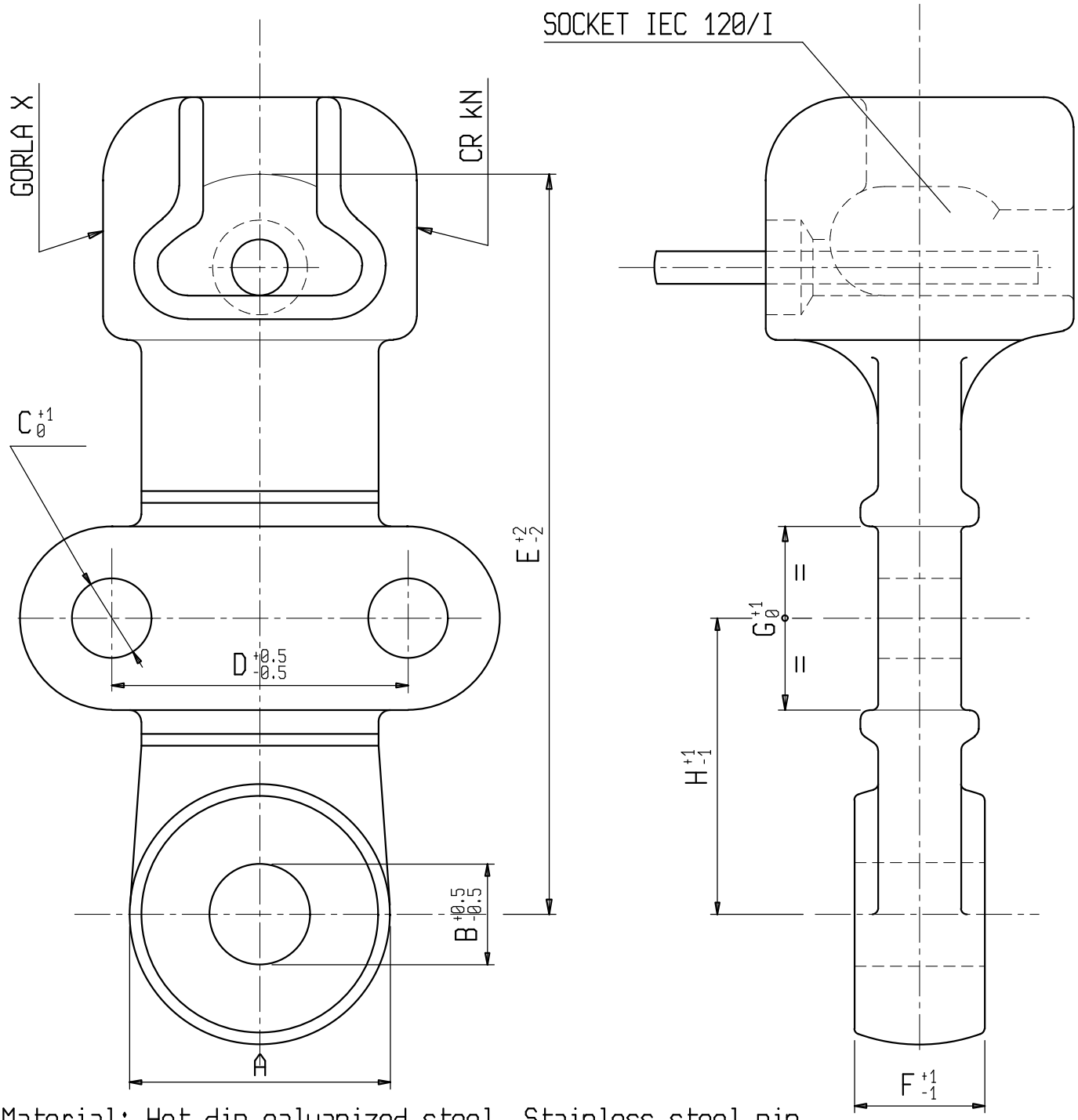

Material: Hot dip galvanized steel. Stainless steel pin

X	A	B	C	D	E	F	G	H	I	CR [kN]
LS 4538	45	17	13,5	50	125	22	31	50	16	120
LS 4545	45	21,5	13,5	50	125	22	31	50	20	210

s.r.l. GORLA MORSETTERIE MILANO TECHNICAL OFFICE	SOCKET EYE	DRG. N. AT28/X SCALE .	
		DRAWN .	DATE .
		APPROVED .	DATE .

N.	DATE	UPDATES	DRAWN	APPROVED
.	.	.	.	.

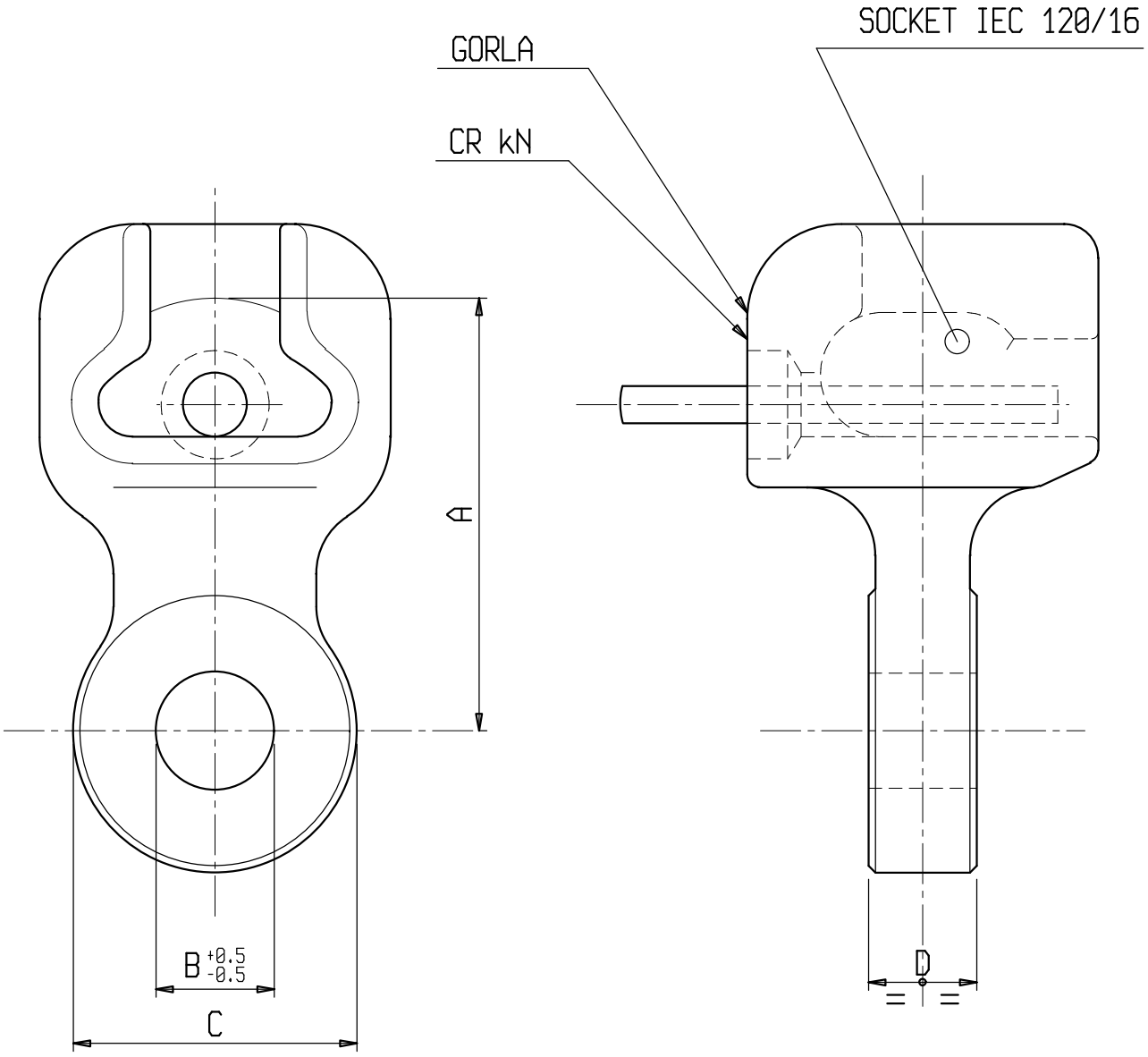

Material: Hot dip galvanized steel. Stainless steel pin.

X	A	B	C	D	CR [kN]		
LS 1102	64	17.5	42	16	120		