s.r.l. GORLA MORSETTERIE MILANO TECHNICAL OFFICE	BALL EYE FOR ARCING HORN FITTING	DRG. N. AT16/X SCALE . DRAWN . DATE . APPROVED .

N.	DATE	UPDATES	DRAWN	APPROVED
.	.	.	.	.
	.	.		

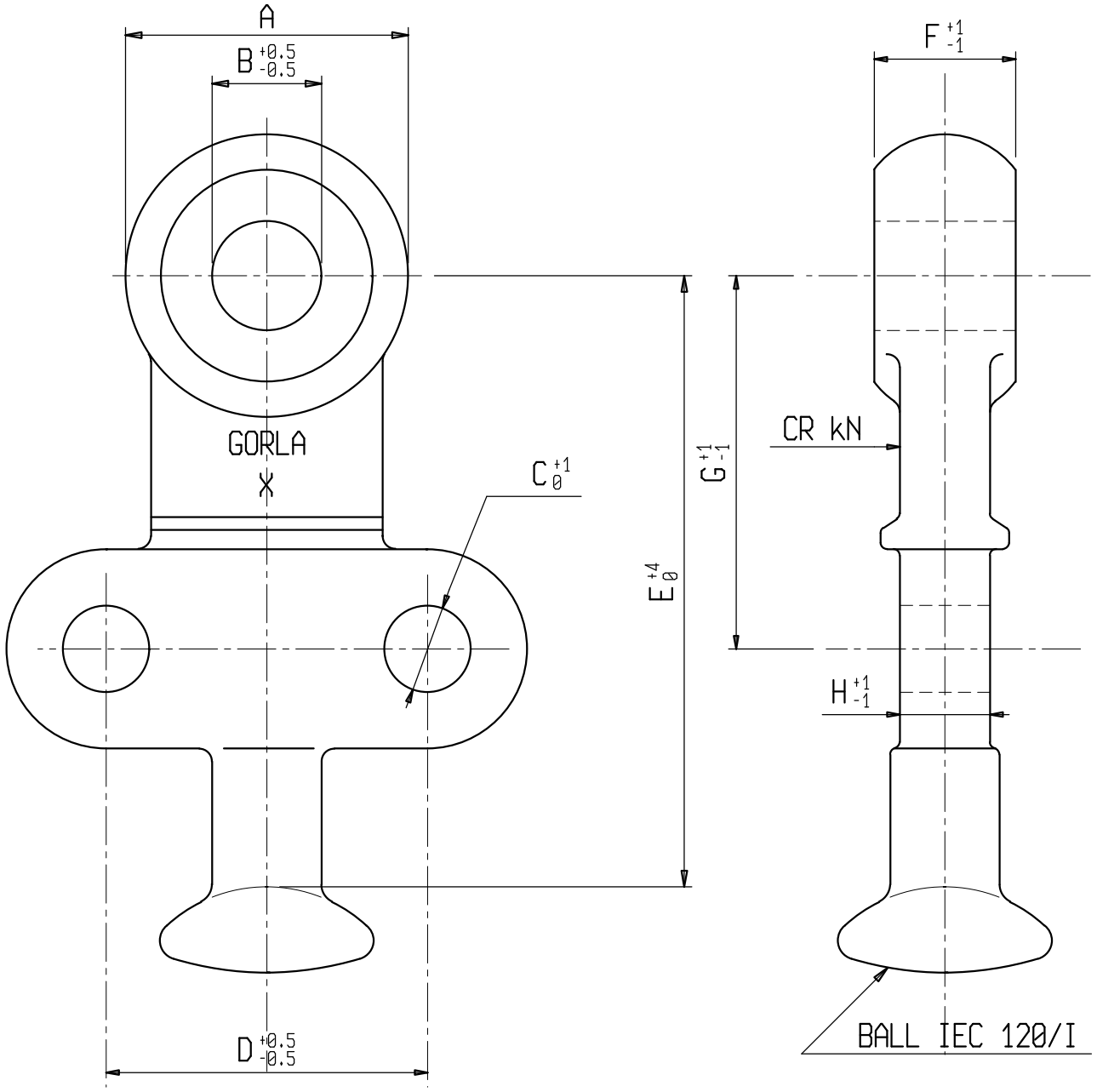

Material: Hot dip galvanized steel.

X	A	B	C	D	E	F	G	H	I	CR [kN]
LS 4542	45	17	13,5	50	95	22	58	14	16	120