s.r.l. GORLA MORSETTERIE MILANO TECHNICAL OFFICE	90° CLEVIS-CLEVIS	DRG. N. AT26/X SCALE . DRAWN . / DATE . APPROVED . / DATE .

N.	DATE	UPDATES	DRAWN	APPROVED
.	.	.	.	.

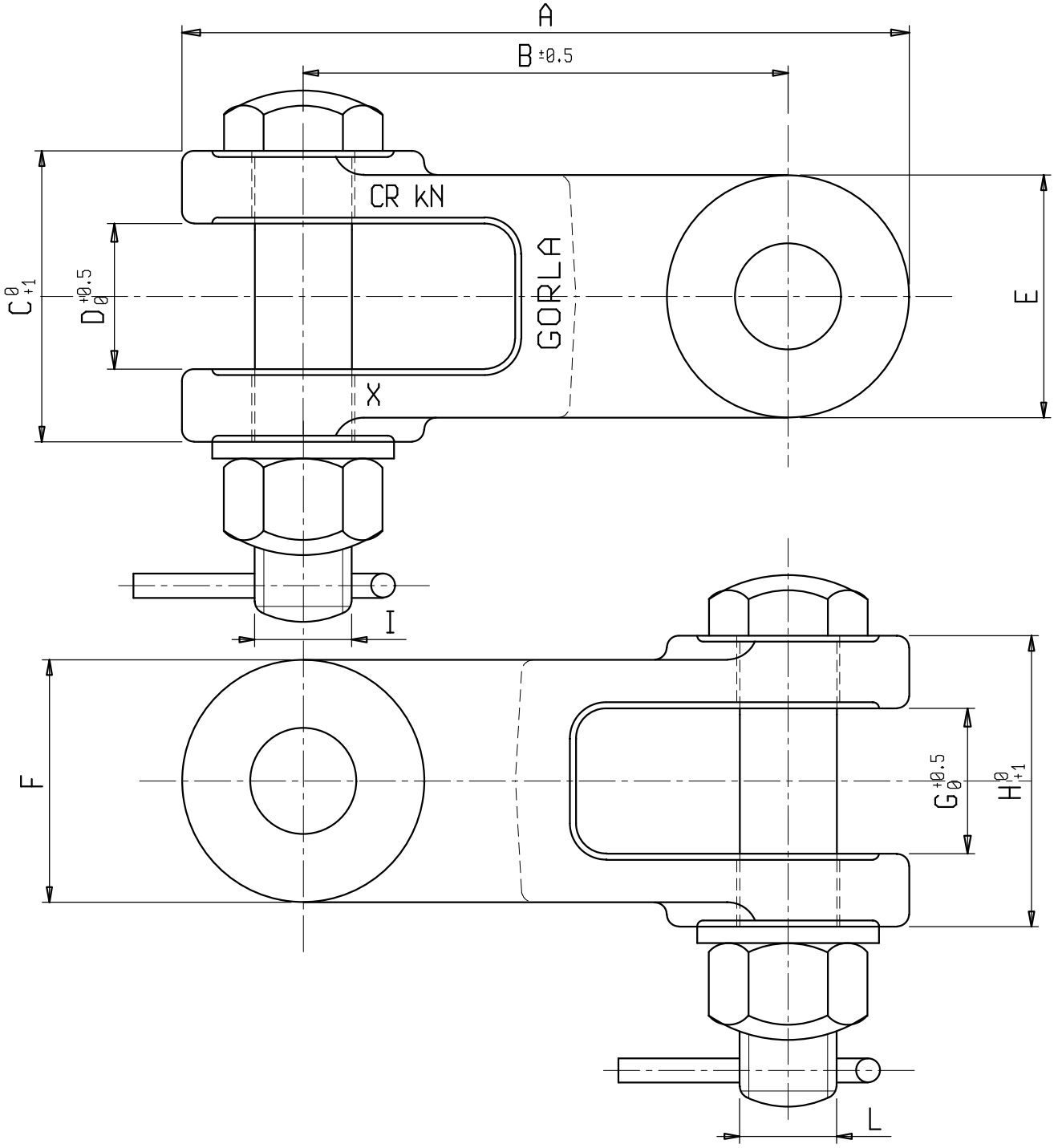

Material: Hot dip galvanized steel. Stainless steel pins.

X	A	B	C	D	E	F	G	H	I	L	CR [kN]
LS 6392	120	80	48	24	40	40	24	48	M16	M16	120