s.r.l. GORLA
MORSETTERIE MILANO

TECHNICAL OFFICE

LARGE BALL EYE
FOR ARCING HORN FITTING

DRG. N.	AT18/X
SCALE	.
DRAWN	.
DATE	.
APPROVED	.

N.	DATE	UPDATES	DRAWN	APPROVED
.	.	.	.	.
	.	.		

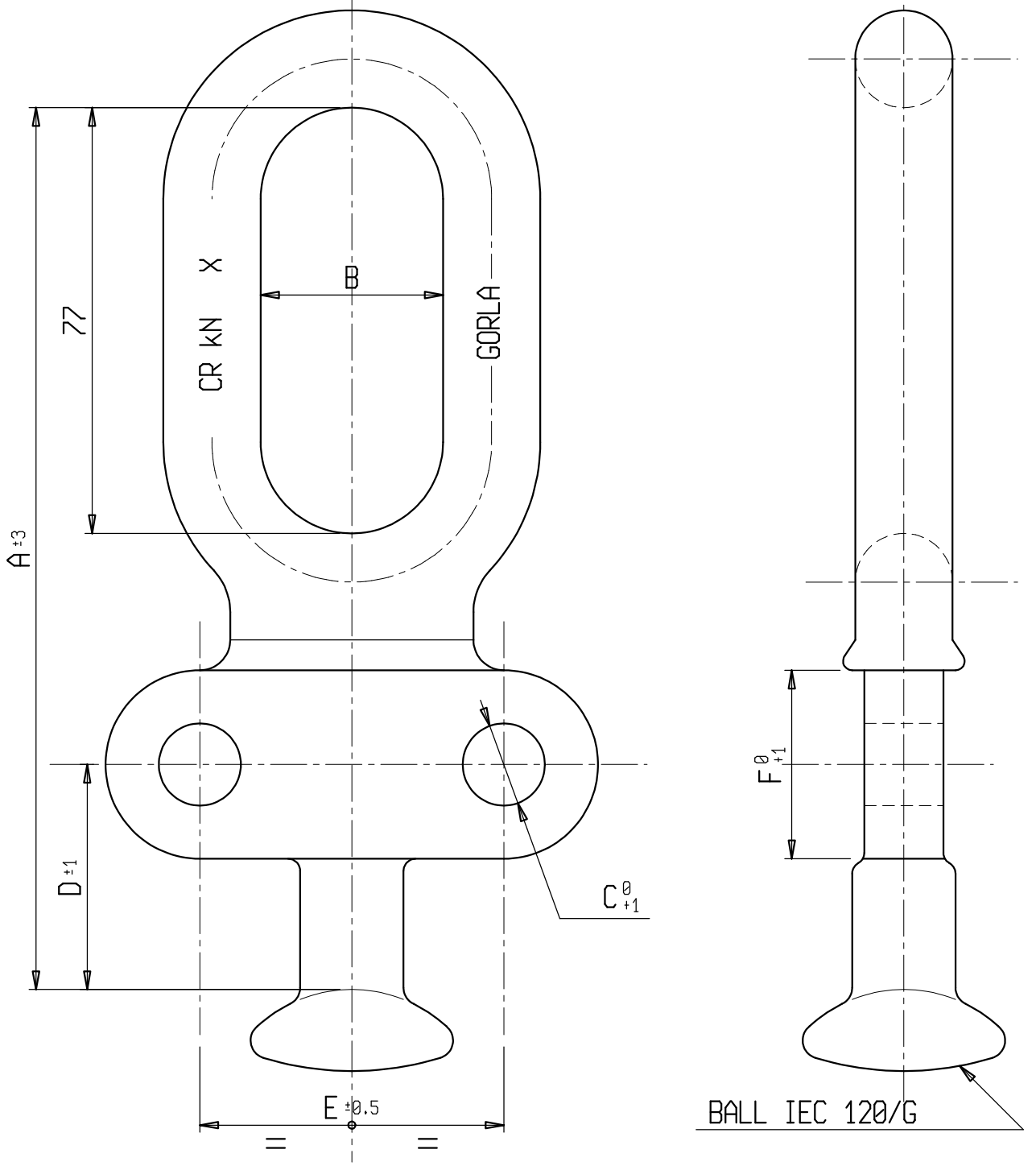

Material: Hot dip galvanized steel.

X	A	B	C	D	E	F	G	CR [kN]
LS 1165	145	30	13,5	37	50	31	16	120
LS 1166	160	30	13,5	47	50	21,5	20	210

s.r.l. GORLA MORSETTERIE MILANO TECHNICAL OFFICE	LARGE BALL EYE	DRG. N. AT19/X SCALE . DRAWN . DATE . APPROVED .

N.	DATE	UPDATES	DRAWN	APPROVED
.	.	.	.	.
	.	.		

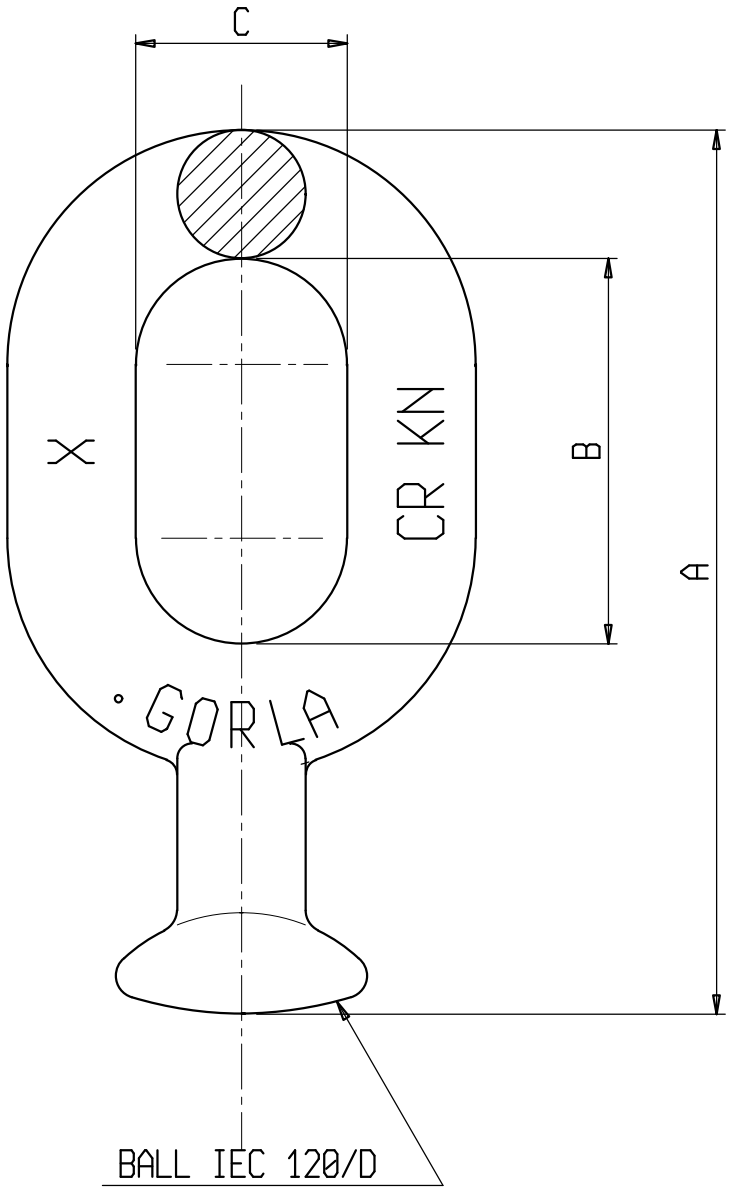

Material: Hot dip galvanized steel.

X	A	B	C	D	CR [kN]			
LS 0981	117	51	28	16	120			

s.r.l. GORLA MORSETTERIE MILANO TECHNICAL OFFICE	BALL EYE	DRG. N. AT20/X SCALE . DRAWN . DATE . APPROVED .

N.	DATE	UPDATES	DRAWN	APPROVED
.	.	.	.	.
	.	.		

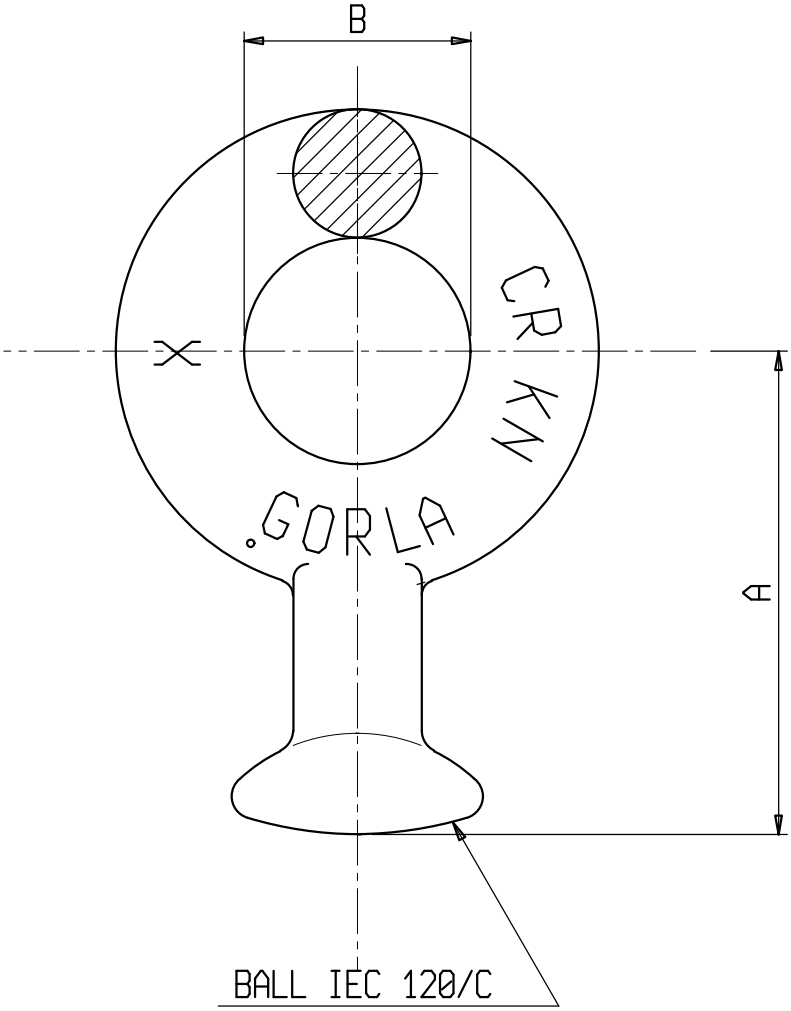

Material: Hot dip galvanized steel.

X	A	B	C	CR [kN]				
LS 1101	64	30	16	120				