s.r.l. GORLA
MORSETTERIE
MILANO

T CONNECTOR
FOR QUAD Al CONDUCTOR RUN AND Al STUD TAP

DRG. N. 92/AA/X

Rev.1 dated 09.11.12

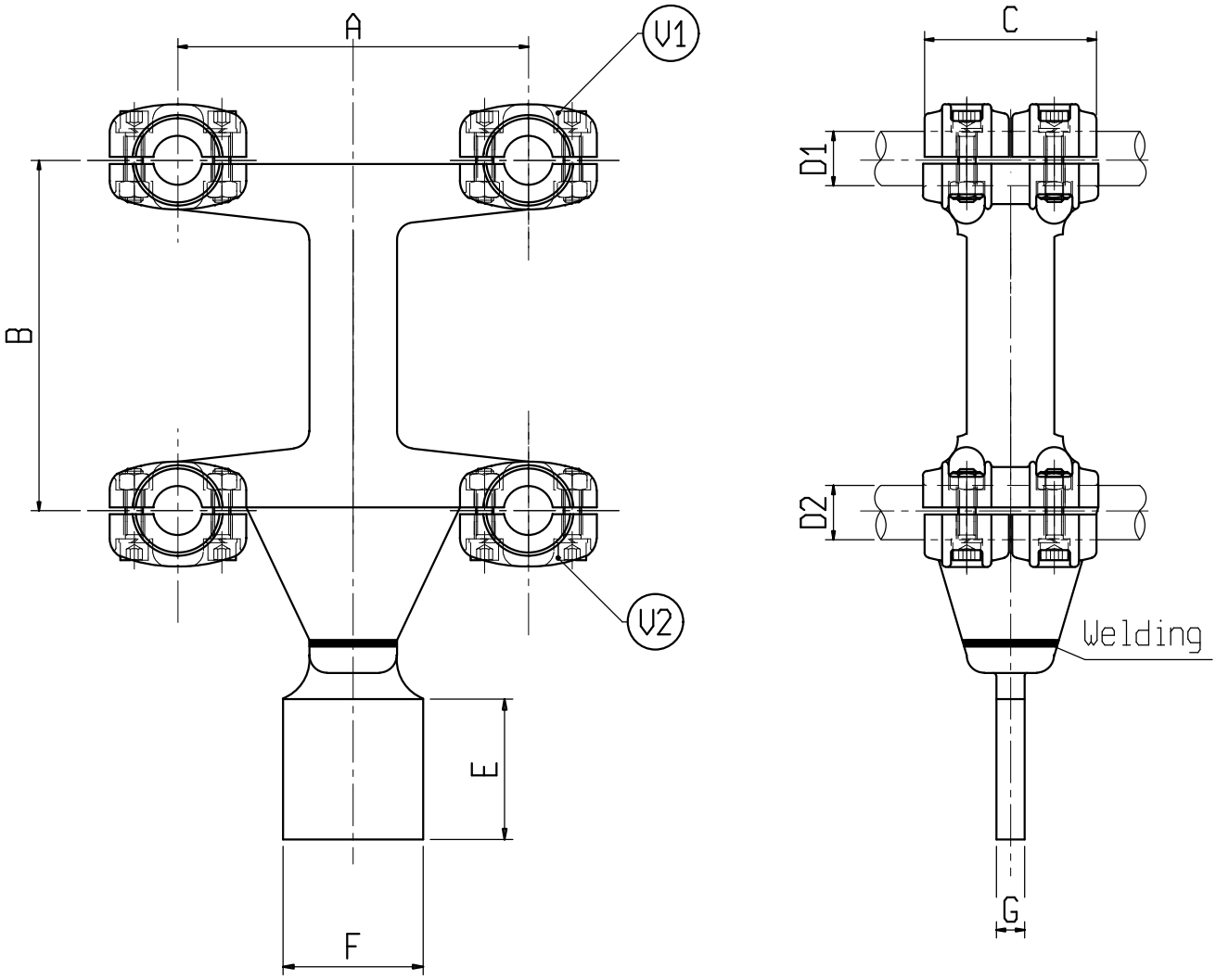

Material: Aluminium alloy
Bolts: Stainless steel

X	ø CONDUCTOR		A	B	C	E	F	G	V1	V2
	D1	D2								
C 0482AA	20-25	20-25	400	400	100	80	80	15	M10	M10