s.r.l. GORLA MORSETTERIE MILANO TECHNICAL OFFICE	T CONNECTOR FOR Al CONDUCTOR RUN AND DOUBLE Al CONDUCTOR TAP COMPRESSION TYPE	DRG. N. 87/AA/X SCALE . DRAWN . / DATE . APPROVED . / DATE .

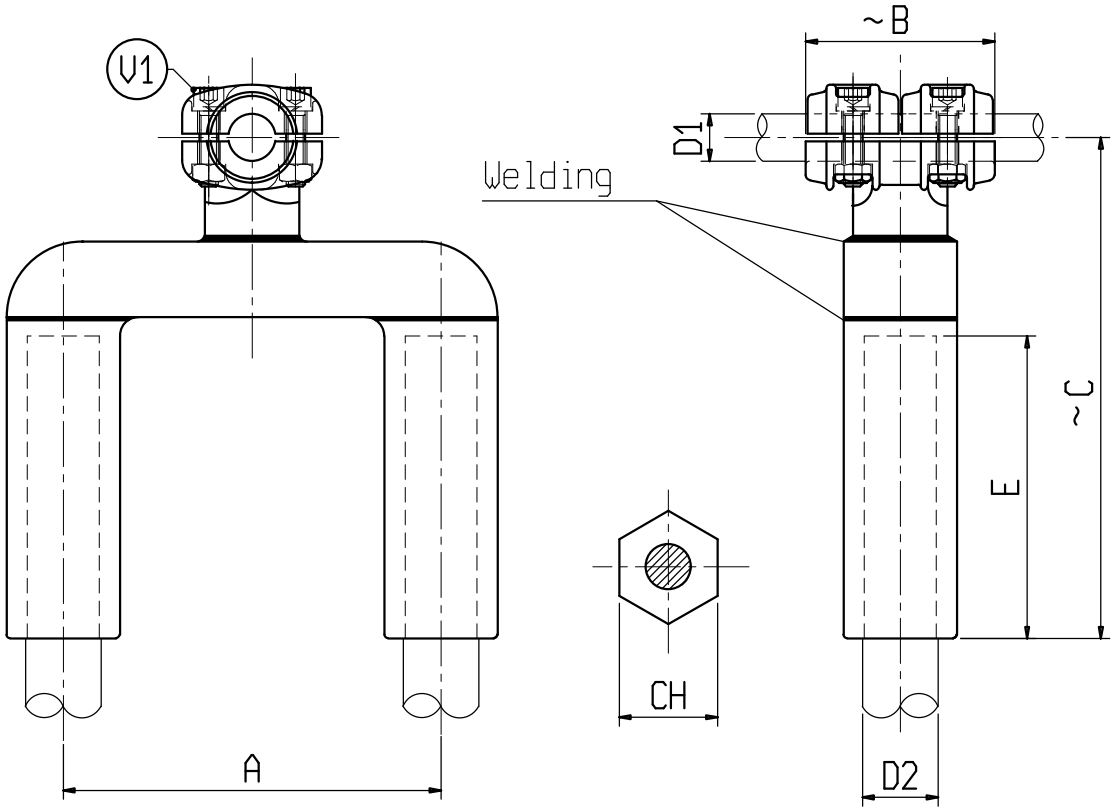

Material: Aluminium alloy

Bolts: Stainless steel

X	ø CONDUCTOR		A	B	C	E	V	CH	X	ø CONDUCTOR		A	B	C	E	V	CH
	D1	D2								D1	D2						
C0428AAC-2C	45-50	35-37	200	100	265	145	M10	54									

s.r.l. GORLA MORSETTERIE MILANO TECHNICAL OFFICE	STRAIGHT AND T CONNECTOR FOR Al CONDUCTOR RUN AND DOUBLE Al CONDUCTOR TAP COMPRESSION TYPE	DRG. N. 88/AA/X SCALE . DRAWN . / DATE . APPROVED . / DATE .

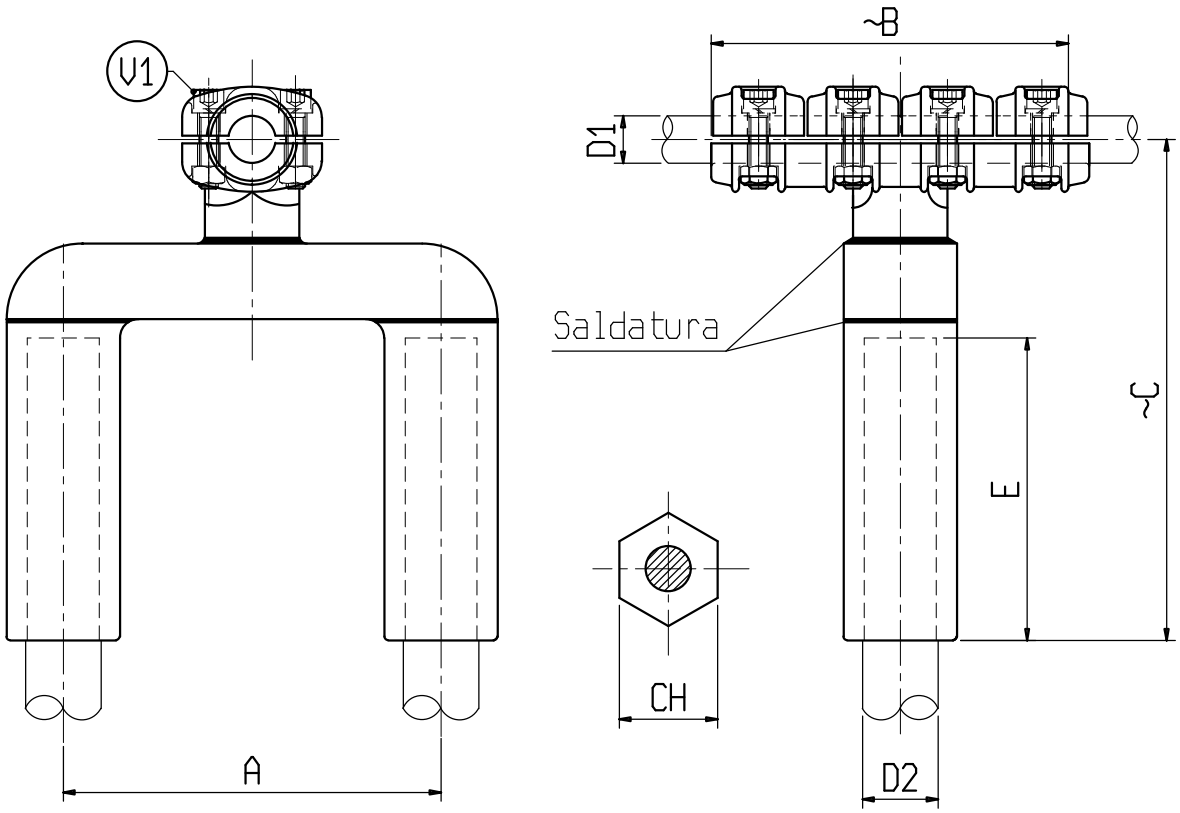

Material: Aluminium alloy

Bolts: Stainless steel

X	ø CONDUCTOR		A	B	C	E	V	CH	X	ø CONDUCTOR		A	B	C	E	V	CH
	D1	D2								D1	D2						
C 0428AAC	45-50	35-37	200	200	265	145	M10	54									