s.r.l. GORLA MORSETTERIE MILANO TECHNICAL OFFICE	ORIENTABLE STRAIGHT AND T CONNECTOR FOR Al CONDUCTOR RUN AND TWO Al CONDUCTOR TAP COMPRESSION TYPE	DRG. N. 80/AA/X SCALE . DRAWN . / DATE . APPROVED . / DATE .

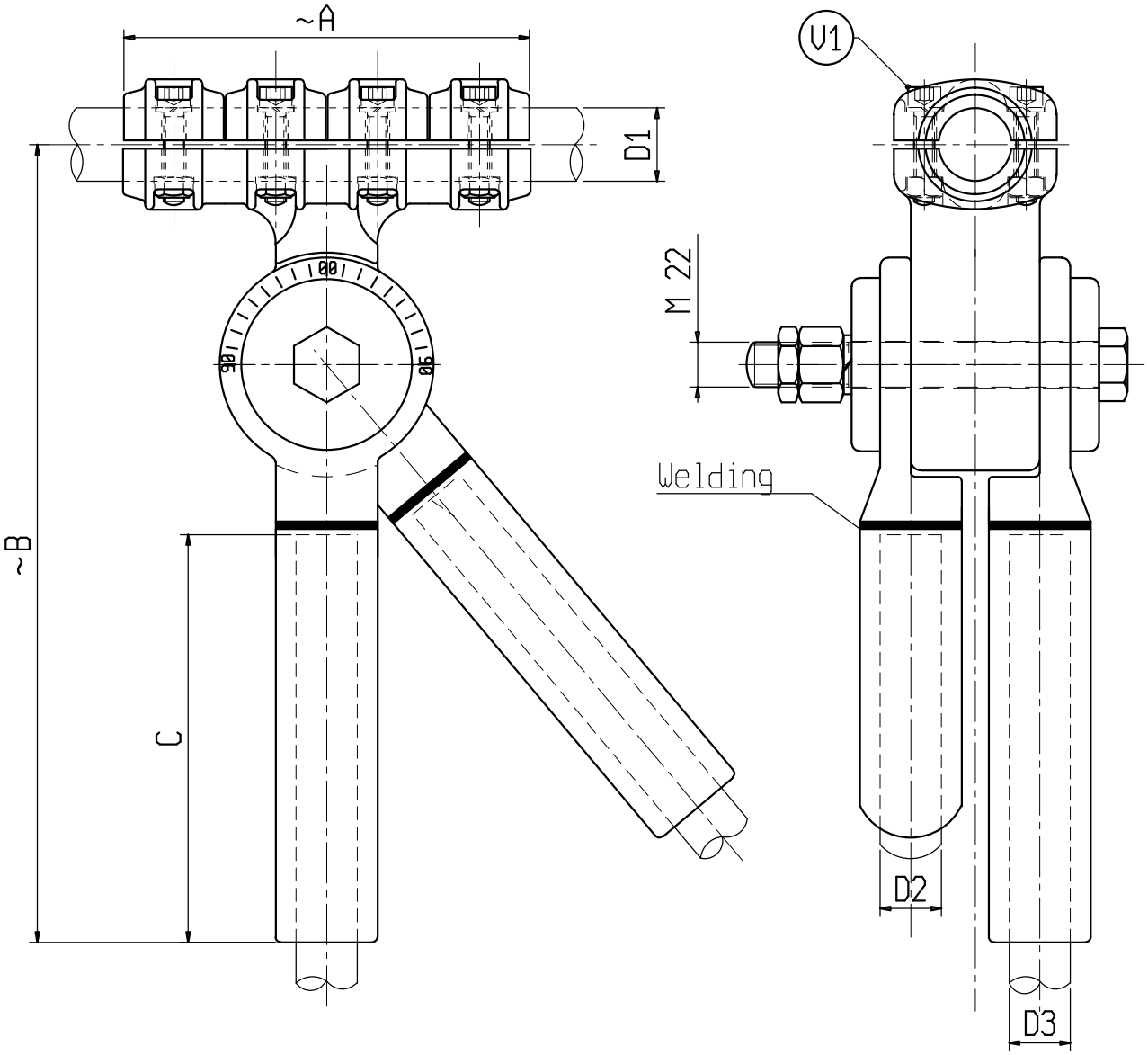

Material: Aluminium alloy

Bolts: Stainless steel

X	ø CONDUCTOR			A	B	C	V1	X	ø CONDUCTOR			A	B	C	V1
	D1	D2	D3						D1	D2	D3				
C6591AA	20-25	30-32	30-32	200	350	150	M10								
C6656AA	25-32	30-32	30-32	200	350	150	M10								