s.r.l. GORLA
MORSETTERIE
MILANO

TECHNICAL OFFICE

T BOLT CONNECTOR
FOR Al CONDUCTOR AND Al STUD RUN AND Al CONDUCTOR TAP

DRG. N. 72/AA/X	
SCALE	
DRAWN .	DATE .
APPROVED .	DATE .

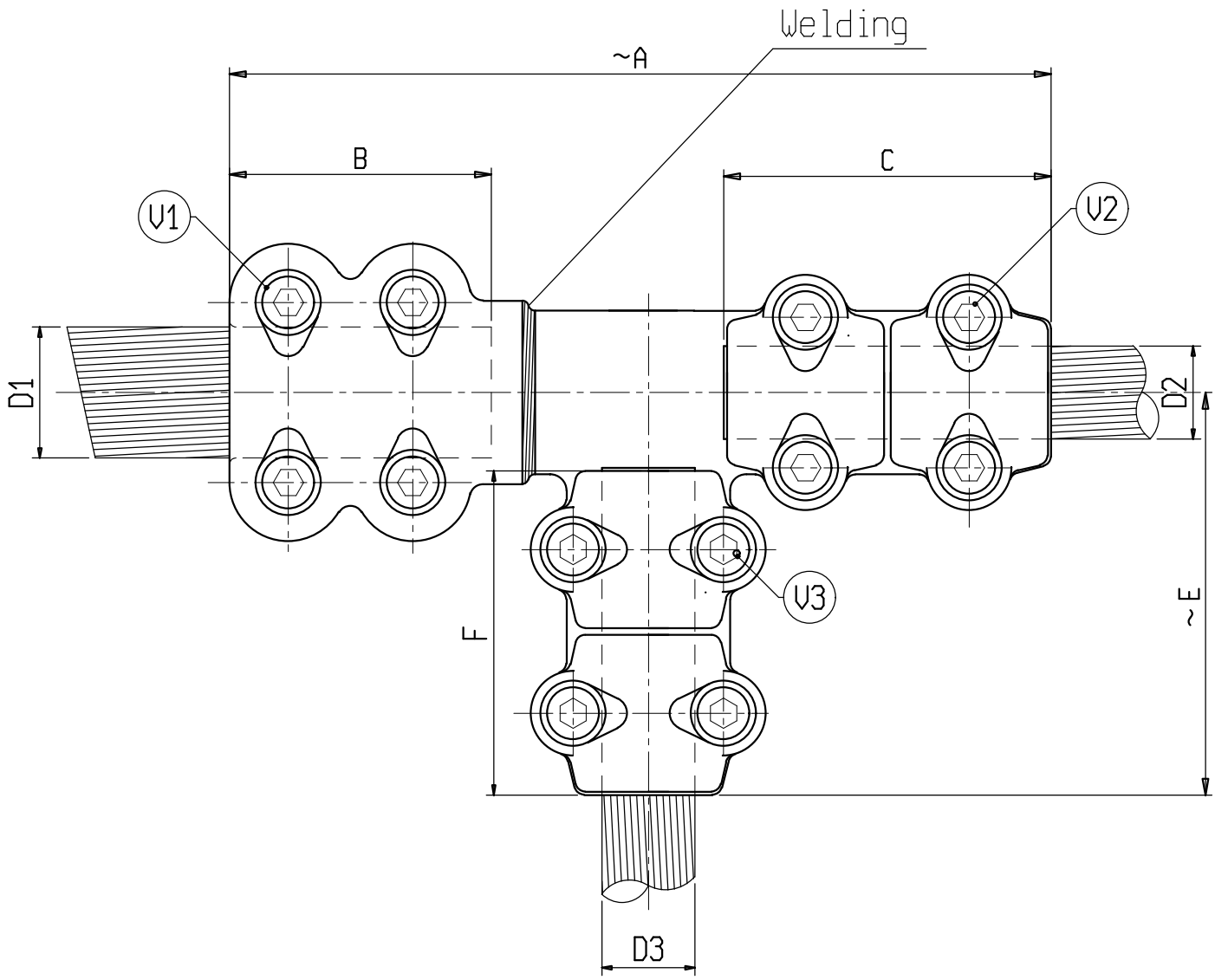

Material: Aluminium alloy

Bolts: Stainless steel

X	ø CONDUCTOR			A	B	C	E	F	V1	V2	V3
	D1	D2	D3								
C 6288AA	30	12-20	12-20	250	80	100	125	100	M10	M10	M10
C 6530AA	40	12-20	12-20	250	80	100	125	100	M10	M10	M10
C 6245AA	40	25-32	25-32	250	80	100	125	100	M10	M10	M10
C 6469AA	40	36-40	36-40	250	80	100	125	100	M10	M10	M10