s.r.l. GORLA MORSETTERIE MILANO TECHNICAL OFFICE	45° CONNECTOR FOR Cu CONDUCTOR AND Al CONDUCTOR	DRG. N. 64/BA/X SCALE . DRAWN . / DATE . APPROVED . / DATE .

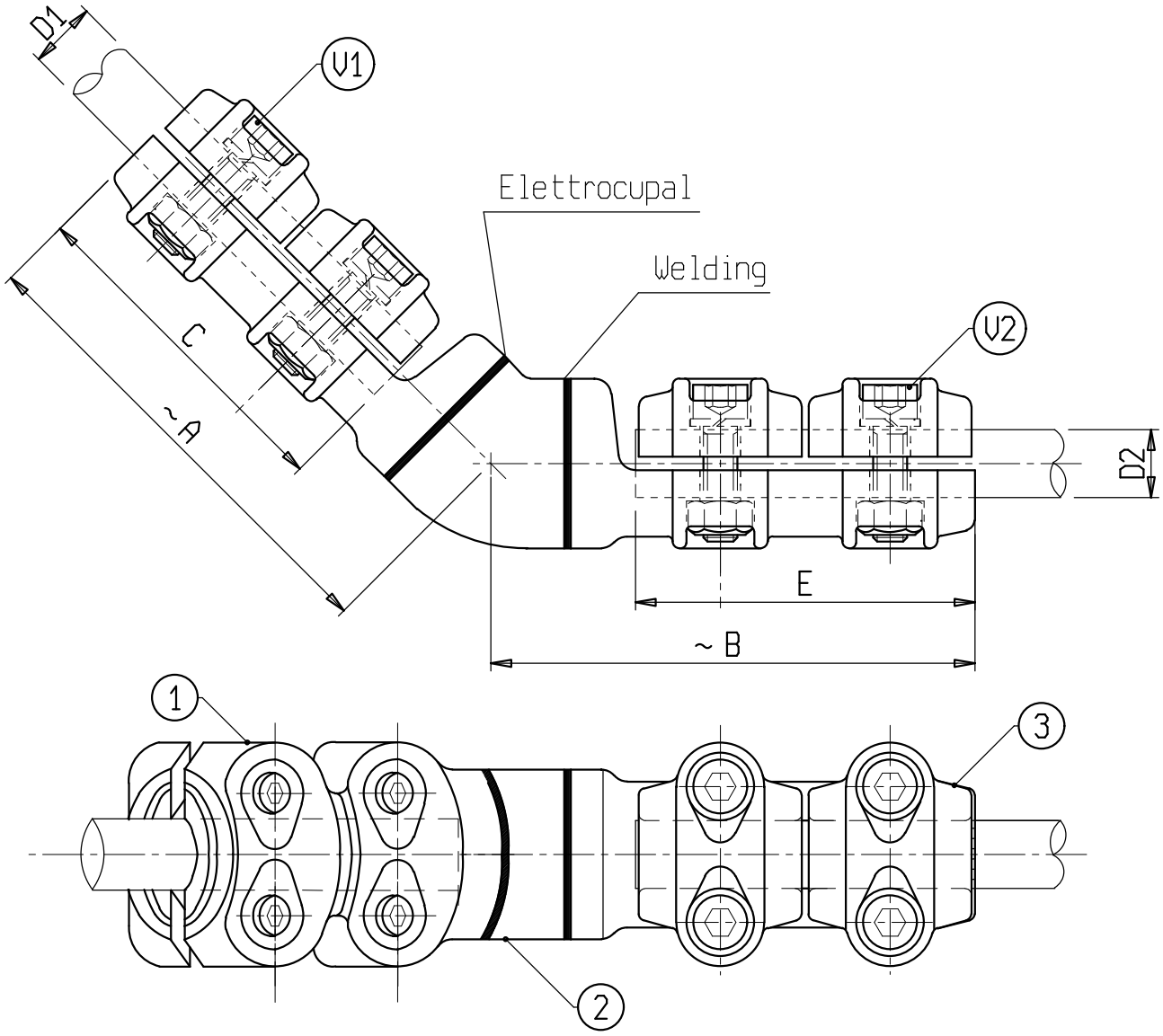

Material: 1 Copper alloy; 2 and 3 Aluminium alloy

Bolts: Stainless steel

X	ø CONDUCTOR		A	B	C	E	V1	V2	X	ø CONDUCTOR		A	B	C	E	V1	V2
	D1	D2								D1	D2						
C 0097BA	20-25	36-40	135	150	100	100	M10	M10									
C 6558BA	25-32	25-32	135	135	100	100	M10	M10									
C 1156BA	25-32	36-40	135	150	100	100	M10	M10									