s.r.l. GORLA MORSETTERIE MILANO TECHNICAL OFFICE	INNER STOP DEVICE FOR TUBE	DRG. N. 54/X SCALE . DRAWN . / DATE . APPROVED . / DATE .

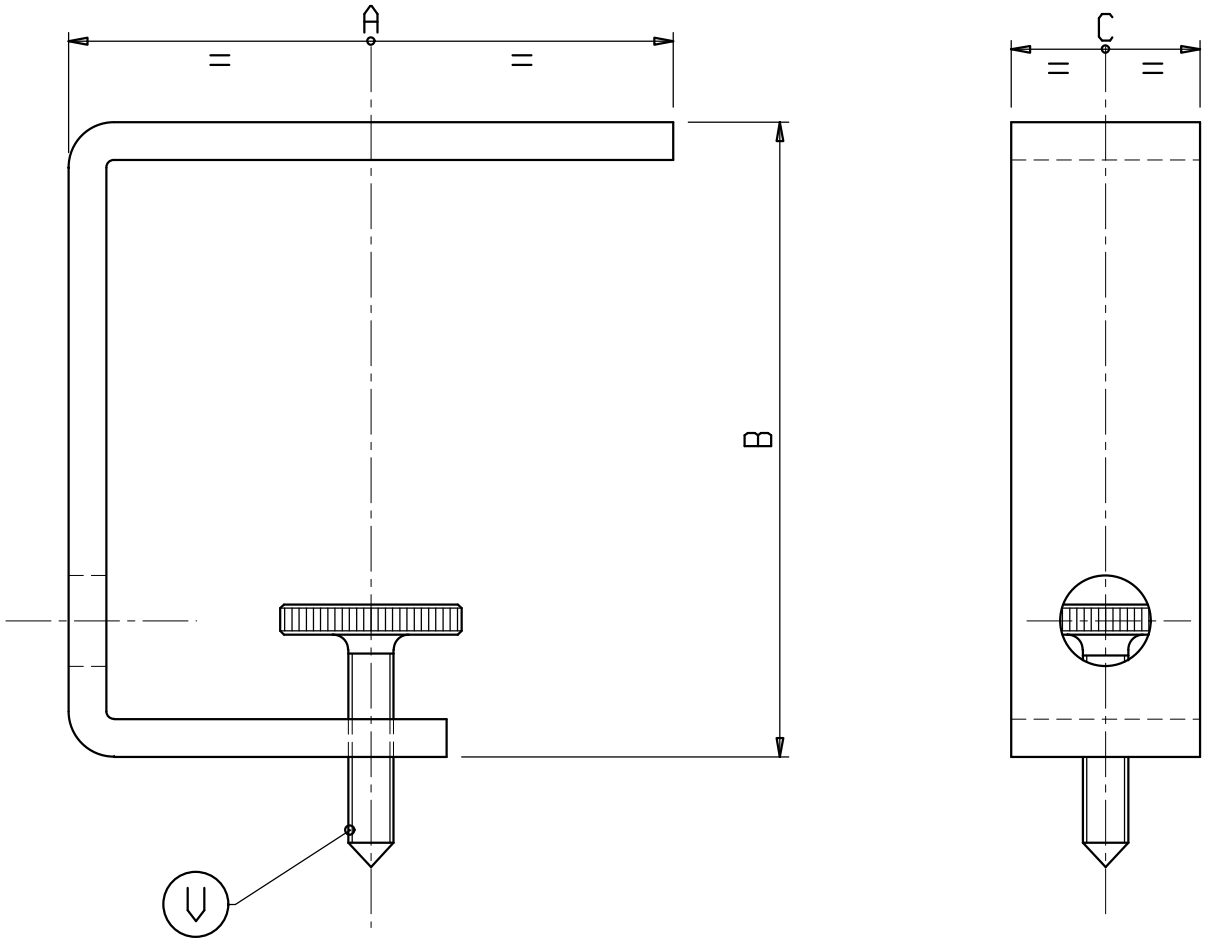

Materiale: Steel, hot dip galvanized

Screw: Stainless steel

X	A	B	C	V	ø INT. TUBE	X	A	B	C	V	ø INT. TUBE
C 691	80	84	25	M6	90						
C 691-1	80	130	25	M6	135						
C 691-2	80	60	25	M6	66						
C 691-3	80	80	25	M6	86						
C 691-4	80	98	25	M6	104						
C 691-5	80	134	25	M6	140						