s.r.l. GORLA
MORSETTERIE
MILANO

TECHNICAL OFFICE

90° CONNECTOR
FOR Cu STUD
AND DOUBLE Al CONDUCTOR

DRG. N. 50/BA/X

Rev.1 dated 14.11.06

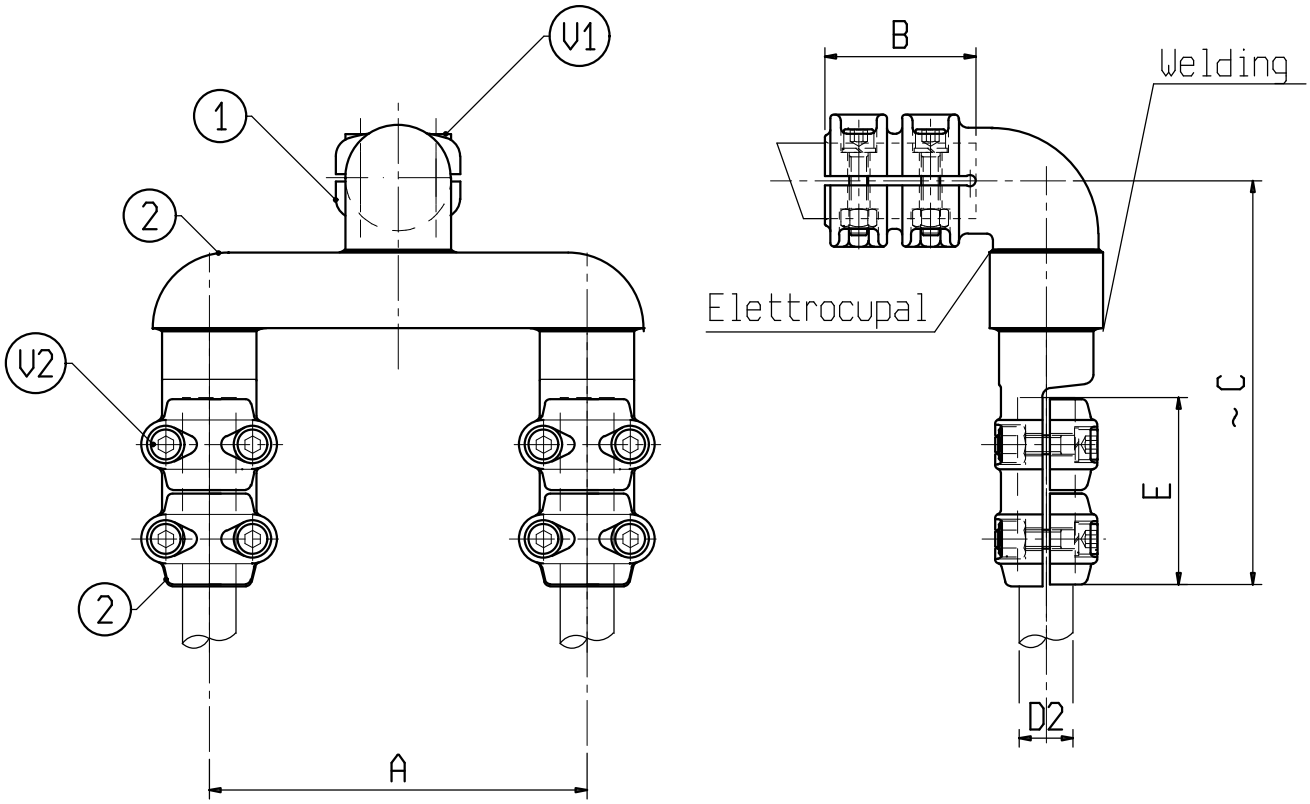

Material: 1 Copper alloy; 2 Aluminium alloy

Bolts: Stainless steel

X	ø CONDUCTOR		A	B	C	E	V1	V2	X	ø CONDUCTOR		A	B	C	E	V1	V2
	D1	D2								D1	D2						
C1240BA	40	32-36	200	80	220	100	M10	M10									