s.r.l. GORLA MORSETTERIE MILANO TECHNICAL OFFICE	90° CONNECTOR FOR Al STUD AND DOUBLE Al CONDUCTOR COMPRESSION TYPE	DRG. N. 44/AA/X SCALE . DRAWN . / DATE . APPROVED . / DATE .

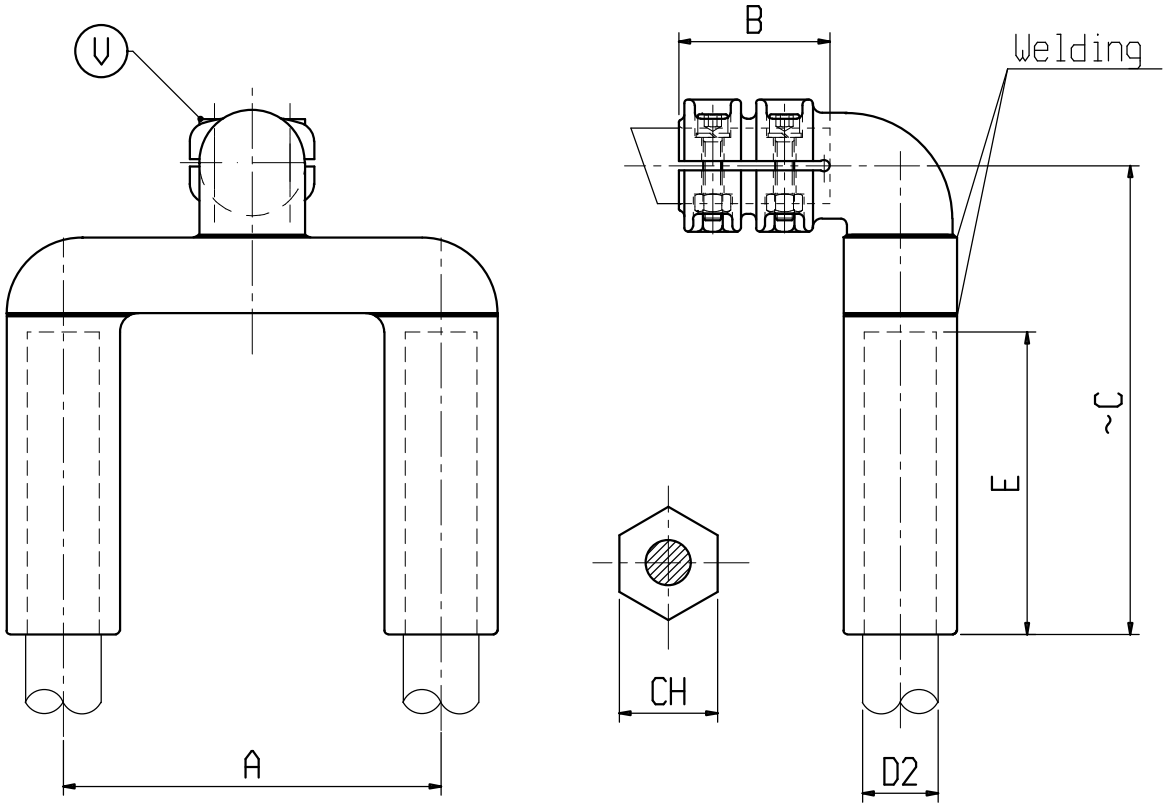

Material: Aluminium alloy

Bolts: Stainless steel

X	ø CONDUCTOR		A	B	C	E	V	CH	X	ø CONDUCTOR		A	B	C	E	V	CH
	D1	D2								D1	D2						
C1074AAC	40	35-37	100	80	250	145	M10	54									
C6221AAC	40	35-37	200	80	250	145	M10	54									
C6779	40	35-37	200	120	250	145	M10	54									

s.r.l. GORLA
MORSETTERIE
MILANO

TECHNICAL OFFICE

90° CONNECTOR
FOR Al STUD
AND DOUBLE Al CONDUCTOR
COMPRESSION TYPE

DRG. N.44/AA-1/X

Rev.1 dated 11.04.07

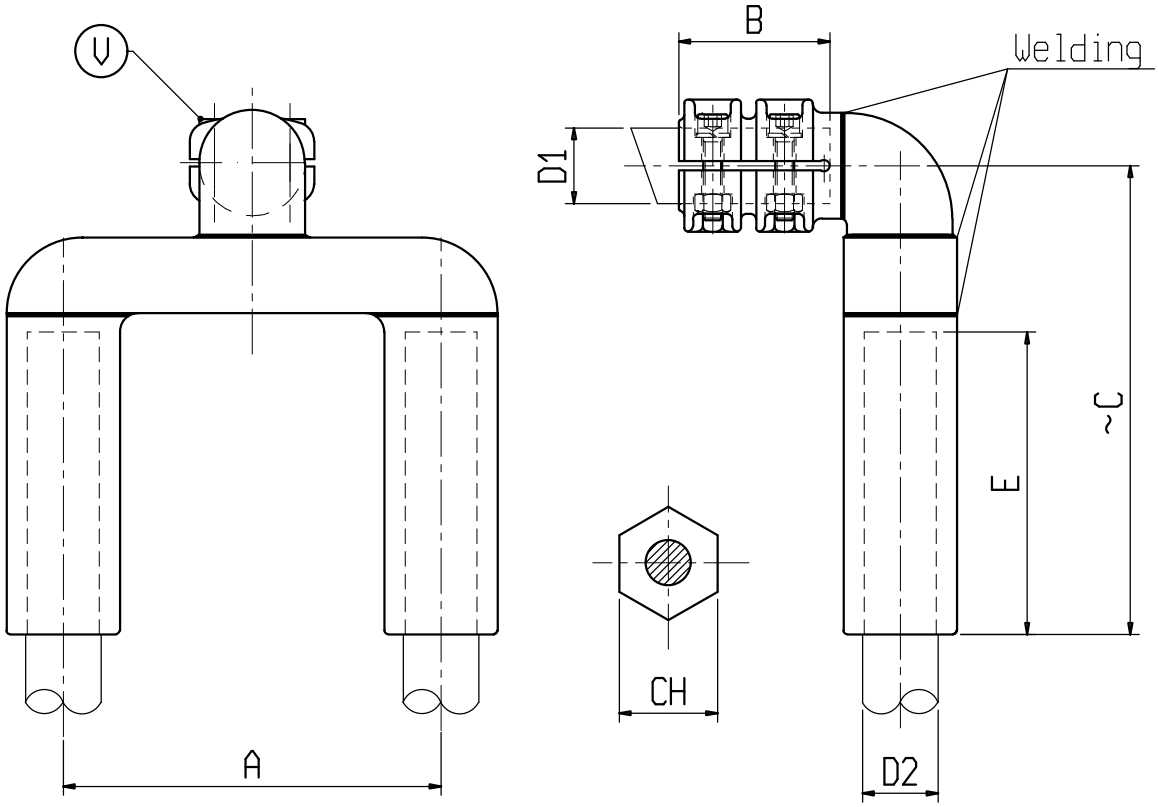

Material: Aluminium alloy

Bolts: Stainless steel

X	ø CONDUCTOR		A	B	C	E	V	CH	X	ø CONDUCTOR		A	B	C	E	V	CH
	D1	D2								D1	D2						
C0227AAC	60	35-37	200	80	250	145	M10	54									