s.r.l. GORLA MORSETTERIE MILANO TECHNICAL OFFICE	STRAIGHT CONNECTOR FOR Cu STUD AND DOUBLE Al CONDUCTOR COMPRESSION TYPE	DRG. N. 42/BA/X SCALE . DRAWN . / DATE . APPROVED . / DATE .

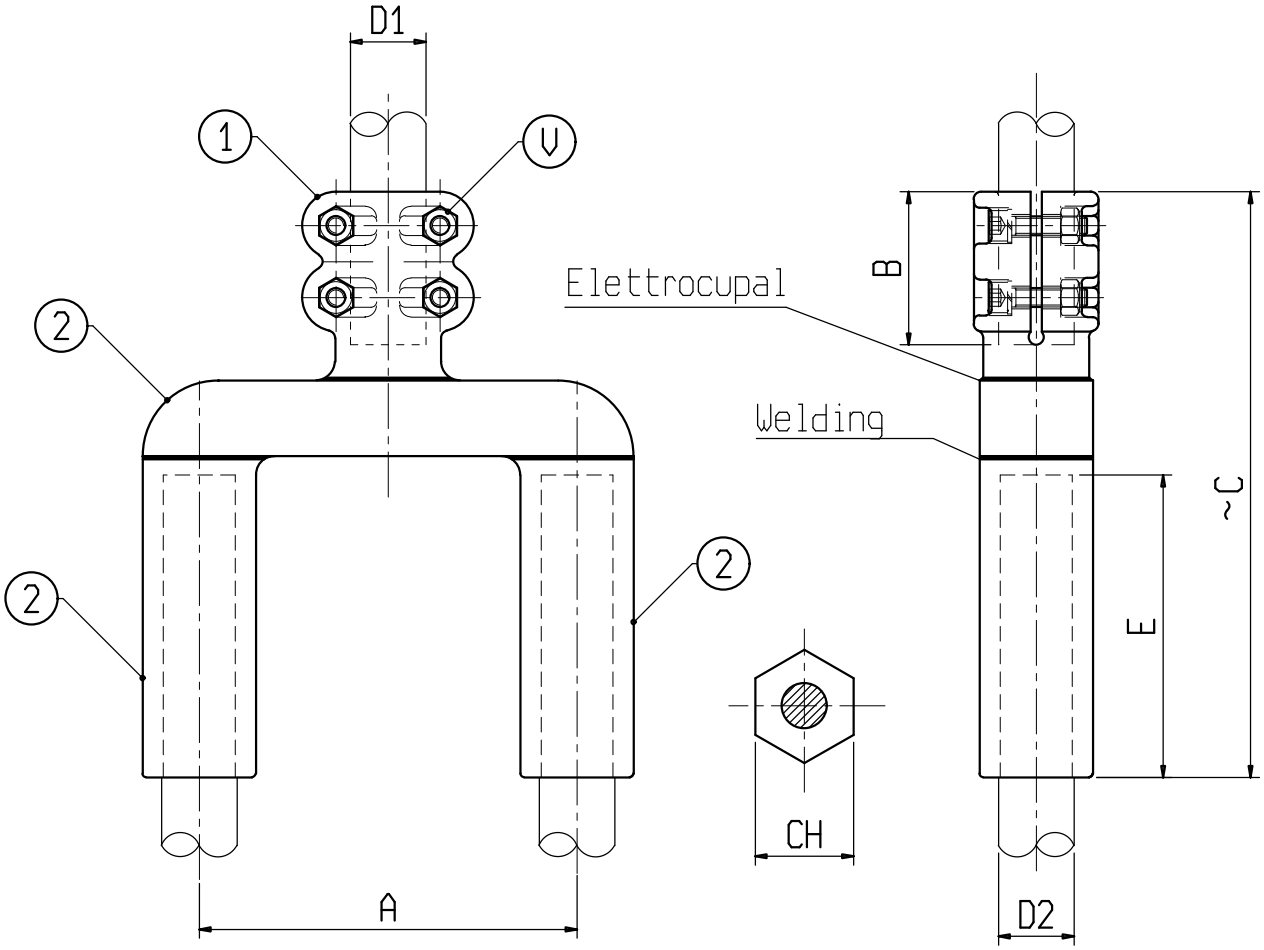

Material: 1 Copper alloy; 2 Aluminium alloy

Bolts: Stainless steel

X	ø CONDUCTOR		A	B	C	E	V	CH	X	ø CONDUCTOR		A	B	C	E	V	CH
	D1	D2								D1	D2						
C1054BAC	40	35-37	100	80	310	145	M10	54									
C6238BAC	40	30-32	200	80	310	145	M10	54									
C6217BAC	40	35-37	200	80	310	145	M10	54									