s.r.l. GORLA
MORSETTERIE
MILANO

TECHNICAL OFFICE

T CONNECTOR
FOR DOUBLE Al CONDUCTOR RUN AND Al CONDUCTOR TAP COMPRESSION TYPE

DRG. N. 41/AA/X

Rev.2 dated 24.05.12

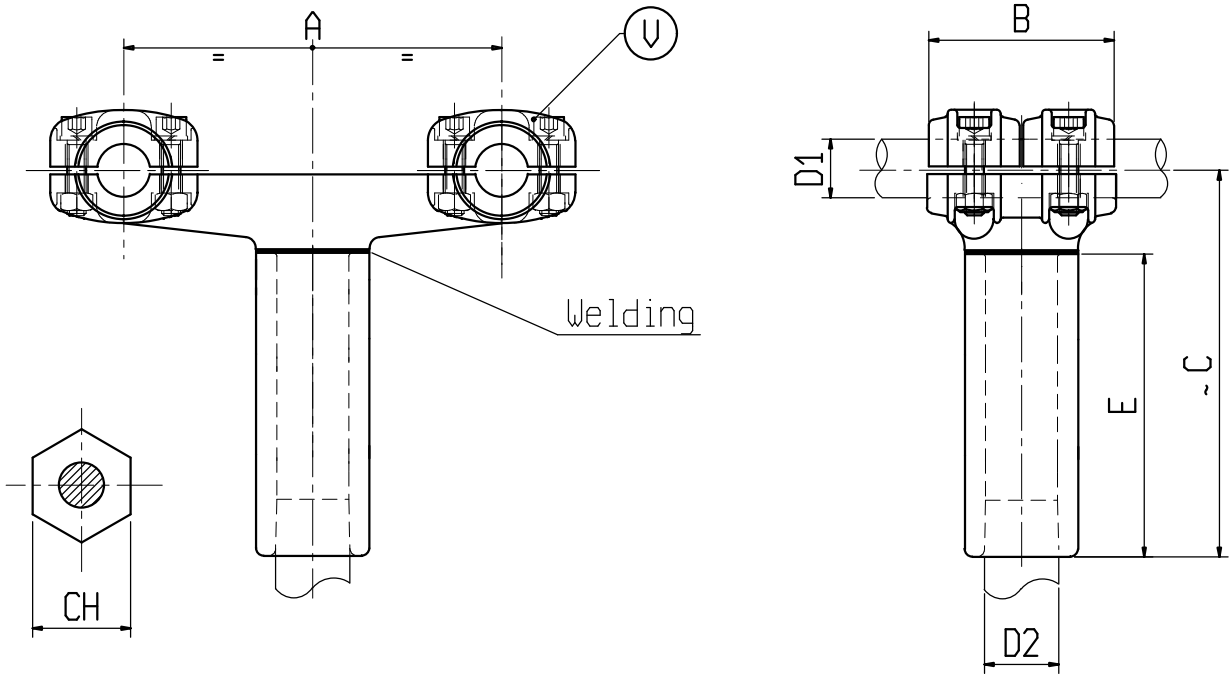

Material: Aluminium alloy

Bolts: Stainless steel

X	ø CONDUCTOR		A	B	C	E	V	CH	X	ø CONDUCTOR		A	B	C	E	V	CH
	D1	D2								D1	D2						
C0460AAC	20-25	35-37	400	100	205	145	M10	54	C6718AAC	32-36	35-37	200	100	205	145	M10	54
C0455AAC	20-25	21,5-23,5	457	100	205	145	M10	34	C1012AAC	32-36	35-37	400	100	205	145	M10	54
C1053AAC	32-36	35-37	100	100	205	145	M10	54									