s.r.l. GORLA MORSETTERIE MILANO TECHNICAL OFFICE	90° EXPANSION CONNECTOR FOR Cu FLAT AND Al TUBE	DRG. N. 40/BA/X SCALE . DRAWN . / DATE . APPROVED . / DATE .

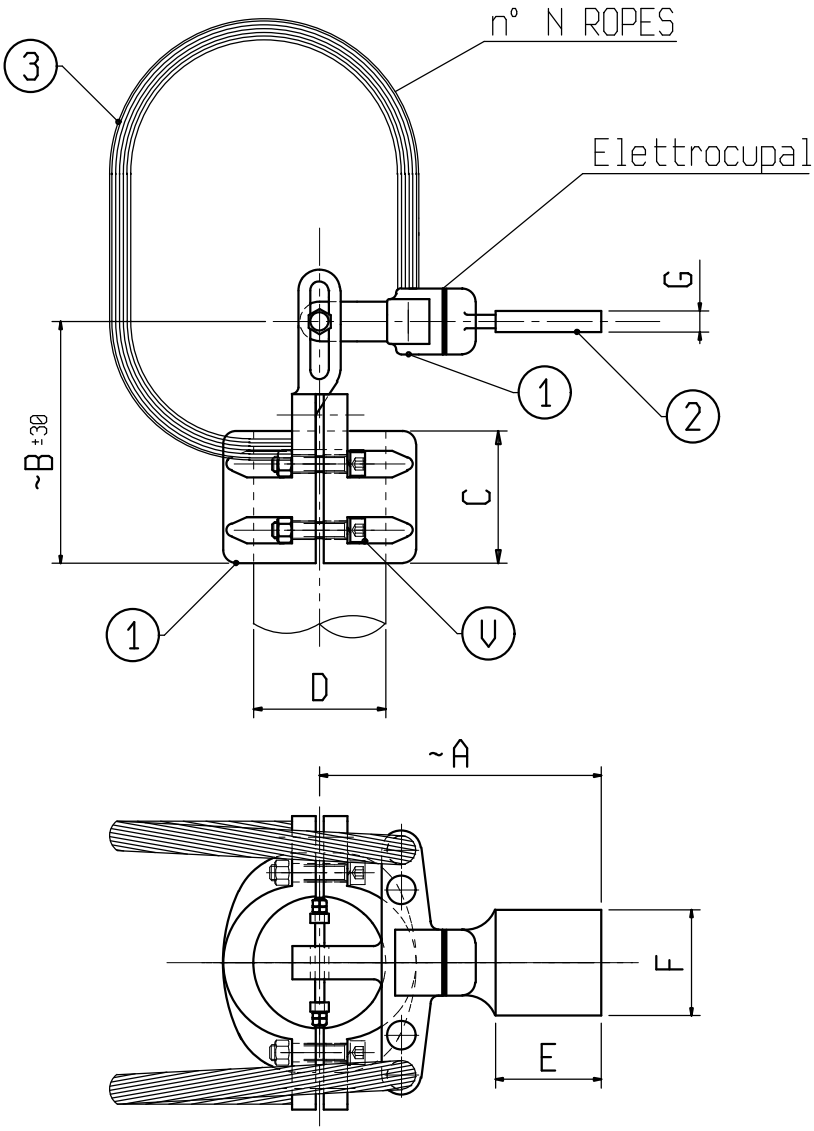

Material: 1 Aluminium alloy; 2 Copper alloy; 3 Aluminium

Bolts: Stainless steel

X	ø COND. D	A	B	C	E	F	G	N	V	X	ø COND. D	A	B	C	E	F	G	N	V
C 1048BA	40	260	170	100	100	100	10	2	M10	C 5968BA	100	265	170	100	105	185	16	4	M12
C 1049BA	70	260	170	100	100	100	16	2	M10										
C 1052BA	100	260	170	100	100	100	16	4	M12										