s.r.l. GORLA
MORSETTERIE
MILANO

TECHNICAL OFFICE

45° CONNECTOR
PER Al CONDUCTOR AND Al FLAT

DRG. N. 27/AA/X

Rev.1 dated 17.10.06

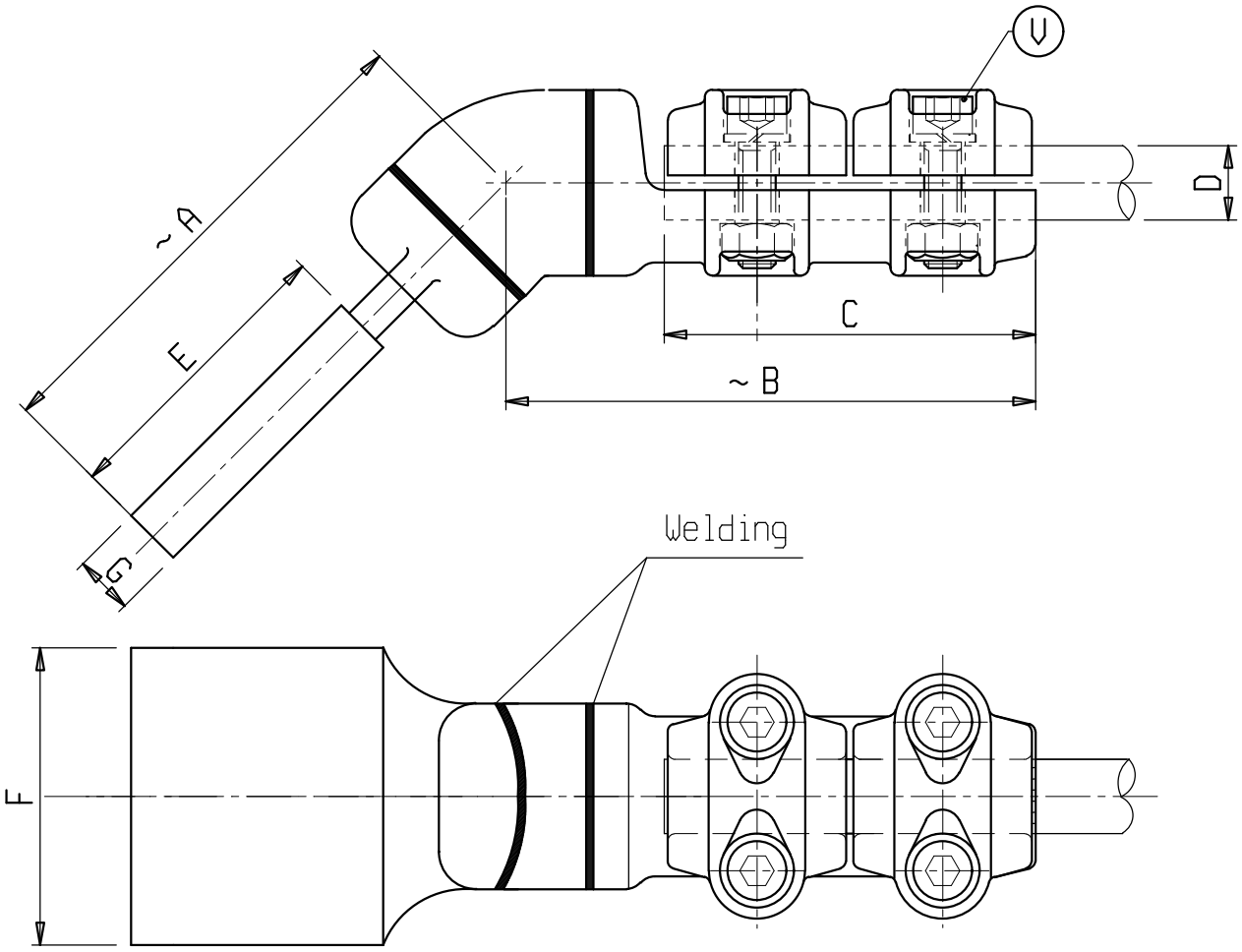

Material: Aluminium alloy
Bolts: Stainless steel

X	ø COND. D	A	B	C	E	F	G	V	X	ø COND. D	A	B	C	E	F	G	V
C 0966AA	12-20	125	135	100	60	60	6	M10	C 1005AA	25-32	165	135	100	100	100	10	M10
C 0967AA	12-20	145	135	100	80	80	8	M10	C 0194AA	32-36	165	135	100	100	100	16	M10
C 0978AA	12-20	165	135	100	100	100	10	M10	C 1008AA	36-40	145	150	100	80	80	10	M10
C 1000AA	20-25	145	135	100	80	80	8	M10									