s.r.l. GORLA
MORSETTERIE
MILANO

TECHNICAL OFFICE

T CONNECTOR
FOR QUAD Al CONDUCTOR RUN AND Al STUD TAP

DRG. N. 91/AA/X

Rev.1 dated 09.11.12

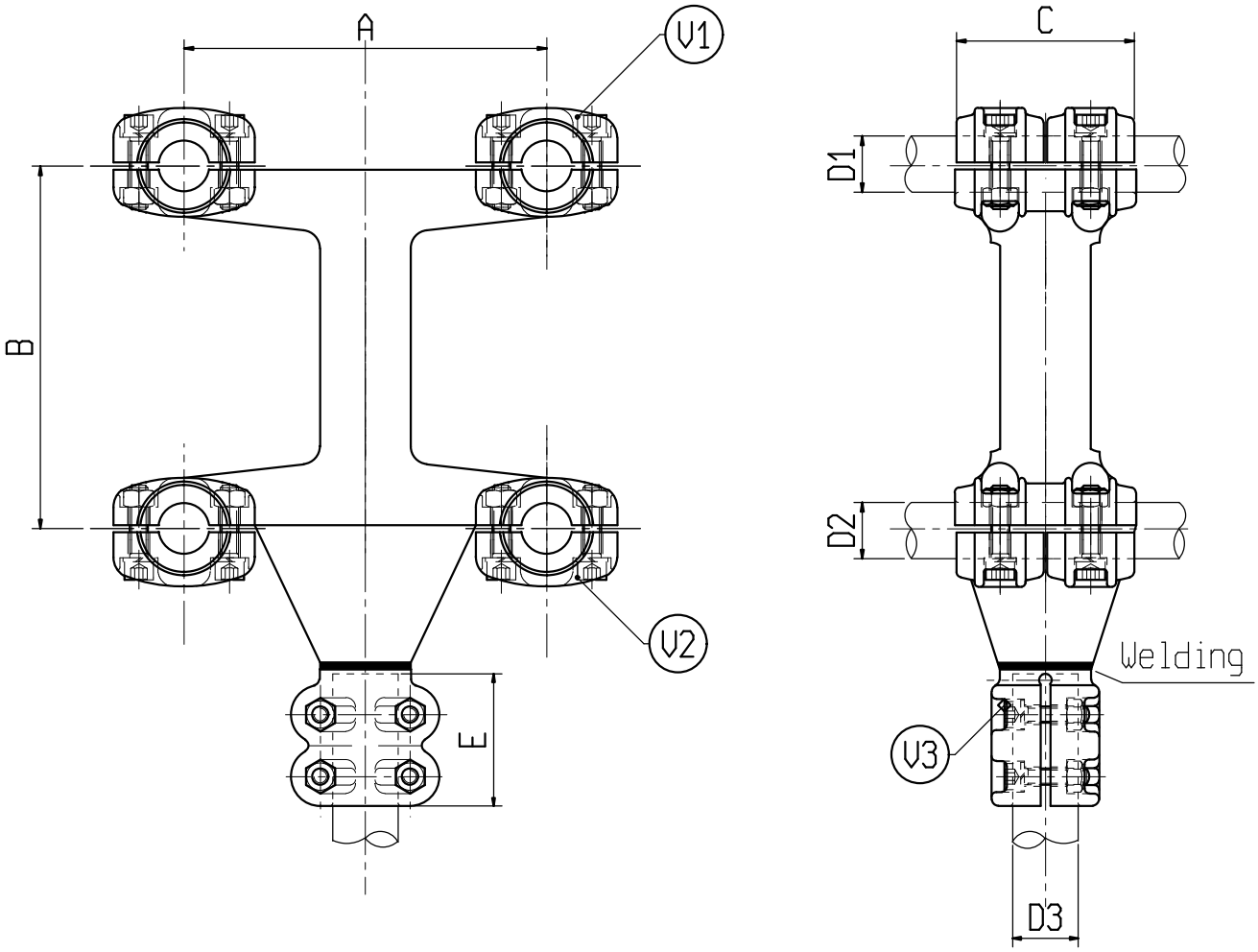

Material: Aluminium alloy

Bolts: Stainless steel

X	ø CONDUCTOR			A	B	C	E	V1	V2	V3	
	D1	D2	D3								
C 0479AA	20-25	20-25	60	400	400	100	80	M10	M10	M10	