s.r.l. GORLA
MORSETTERIE
MILANO

TECHNICAL OFFICE

T CONNECTOR
PER DOUBLE Al CONDUCTOR RUN AND Al PLATE

DRG. N. 90/AA/X

Rev.1 dated 09.11.12

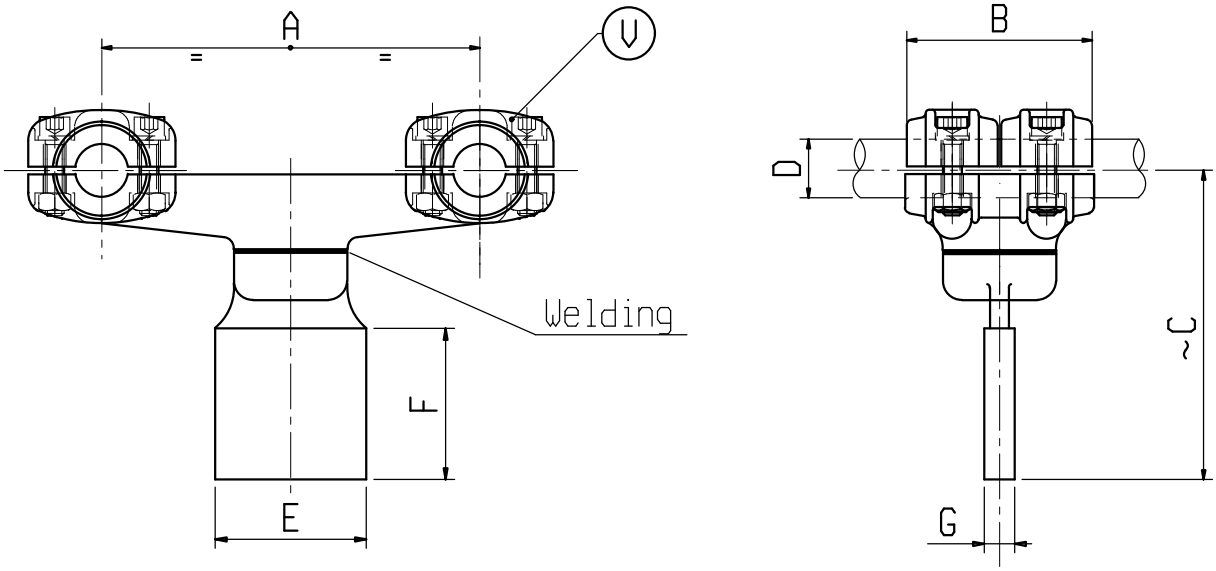

Material: Aluminium alloy

Bolts: Stainless steel

X	ø CONDUCTOR D	A	B	C	E	F	G	V	X	ø CONDUCTOR D	A	B	C	E	F	G	V
C 0483AA	20-25	400	100	165	80	80	15	M10									