s.r.l. GORLA
MORSETTERIE
MILANO

TECHNICAL OFFICE

T BOLT CONNECTOR
FOR Cu STUD RUN
AND Cu CONDUCTOR TAP

DRG. N. 86/BB/X

Rev.1 dated 15.03.10

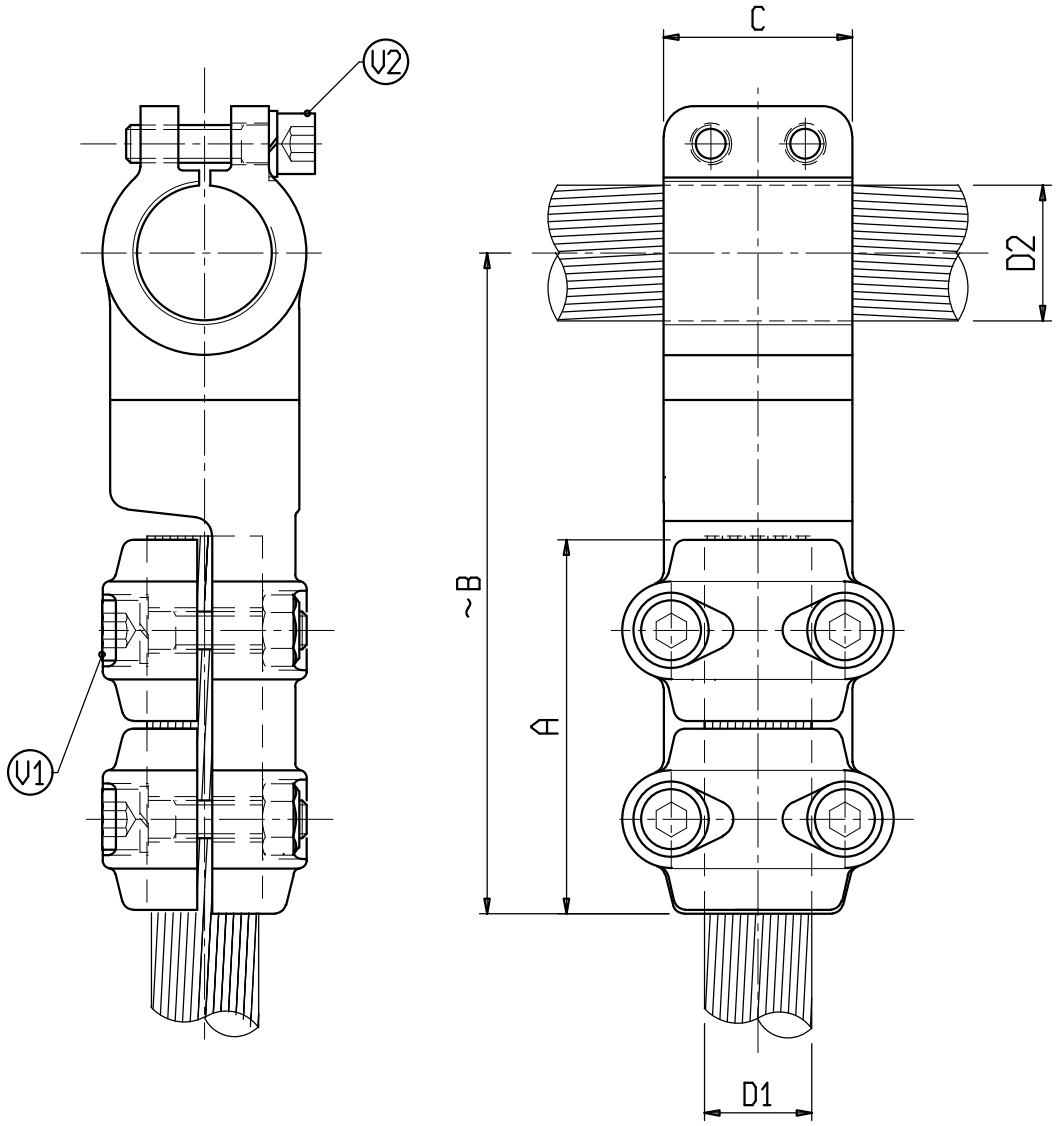

Material: Copper alloy
Bolts: Stainless steel

X	ø CONDUCTOR		A	B	C	V1	V2	X	ø CONDUCTOR		A	B	C	V1	V2
	D1	D2							D1	D2					
C 0387BB	12-20	35-40	100	175	50	M10	M10								
C 0386BB	25-25	35-40	100	175	50	M10	M10								
C 0214BB	25-32	35-40	100	175	50	M10	M10								
C 0381BB	32-36	35-40	100	180	50	M10	M10								