s.r.l. GORLA
MORSETTERIE
MILANO

TECHNICAL OFFICE

T BOLT CONNECTOR
FOR Al TUBE RUN
AND Al CONDUCTOR TAP

DRG. N. 85/AA/X

Rev.1 dated 05.06.09

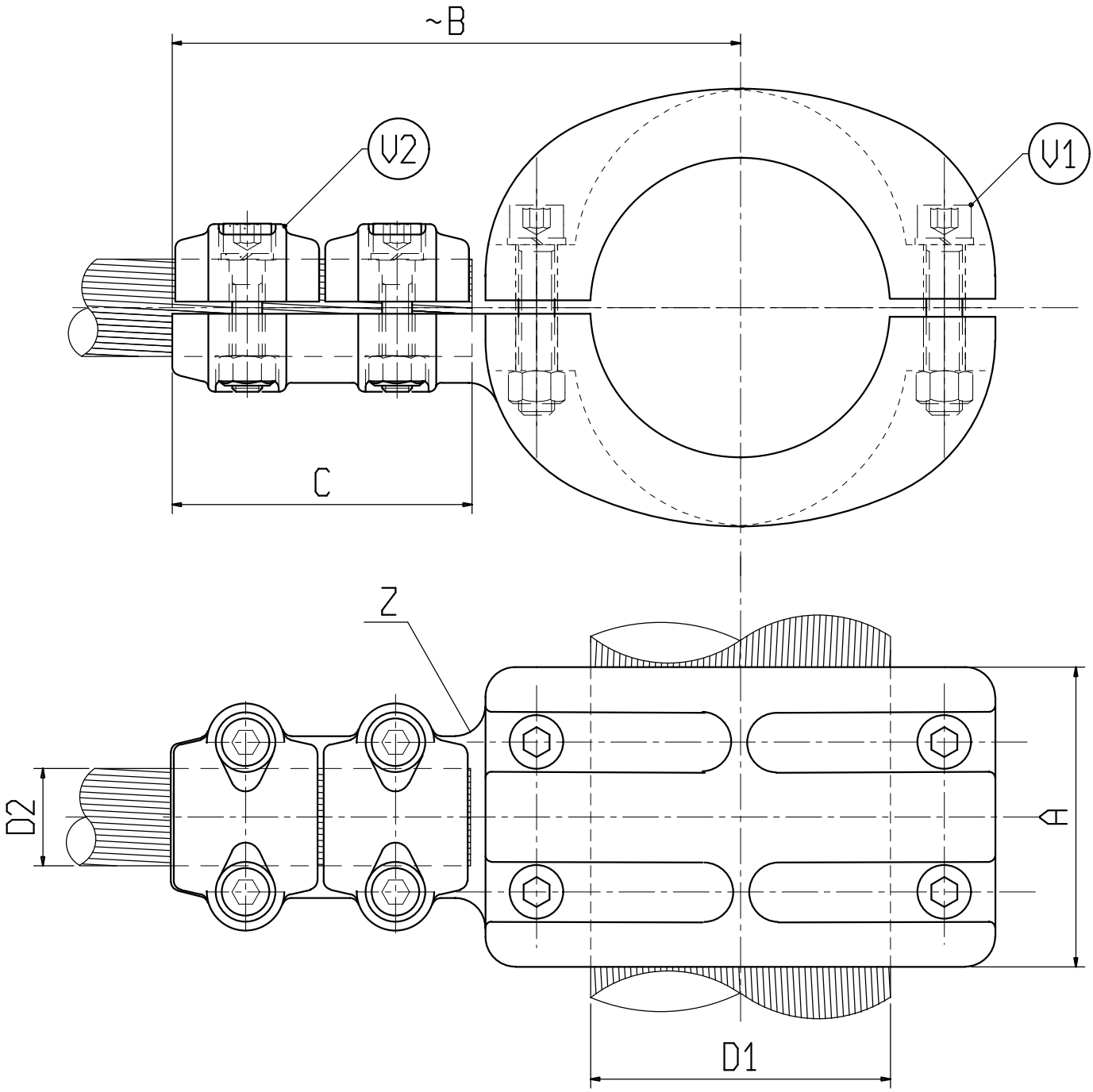

Material: Aluminium alloy

Bolts: Stainless steel

X	ø CONDUCTOR		A	B	C	V1	V2	Z	X	ø CONDUCTOR		A	B	C	V1	V2	Z
	D1	D2								D1	D2						
C 6032AA	100	12-20	100	270	100	M12	M10	Welding	C 0346	120	32-36	100	205	100	M12	M10	
C 1190AA	100	25-32	100	270	100	M12	M10	Welding									
C 6382AA	100	32-36	100	270	100	M12	M10	Welding									