s.r.l. GORLA
MORSETTERIE
MILANO

TECHNICAL OFFICE

STRAIGHT CONNECTOR
FOR Al TUBE
AND Al CONDUCTOR

DRG. N. 82/AA/X

Rev.2 dated 16.09.15

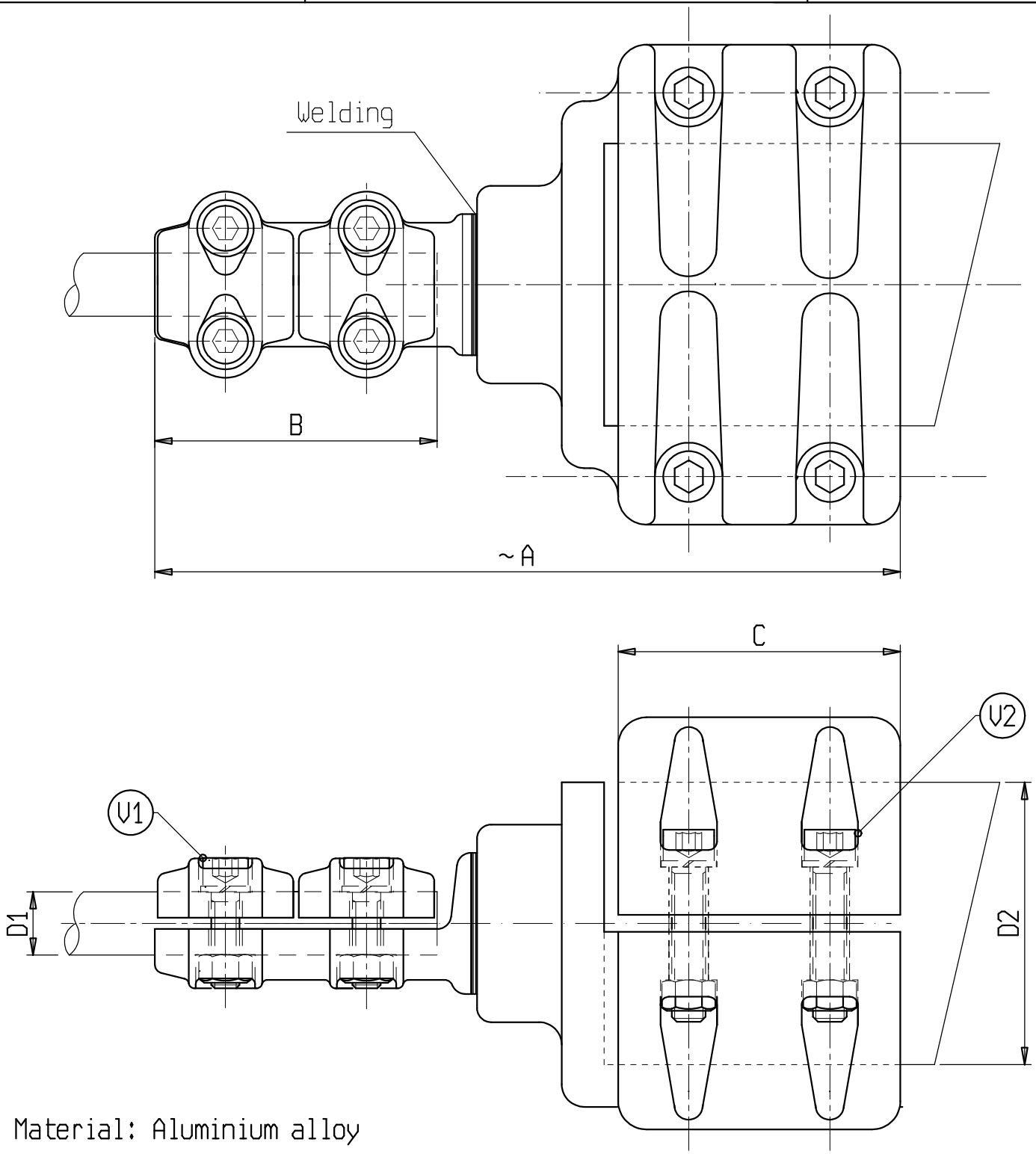

Material: Aluminium alloy

Bolts: Stainless steel

X	ø CONDUCTOR		A	B	C	V1	V2	X	ø CONDUCTOR		A	B	C	V1	V2
	D1	D2							D1	D2					
C 1192AA	25-32	100	270	100	100	M10	M12	C 119236AA	32-36	100	270	100	100	M10	M12
C 0867AA	32-36	70	270	100	100	M10	M10								
C 0207AA	32-36	80	270	100	100	M10	M10								