s.r.l. GORLA MORSETTERIE MILANO TECHNICAL OFFICE	T CONNECTOR FOR Al CONDUCTOR RUN AND DOUBLE Al CONDUCTOR TAP	DRG. N. 76/AA/X SCALE .
		DRAWN . / DATE .
		APPROVED . / DATE .

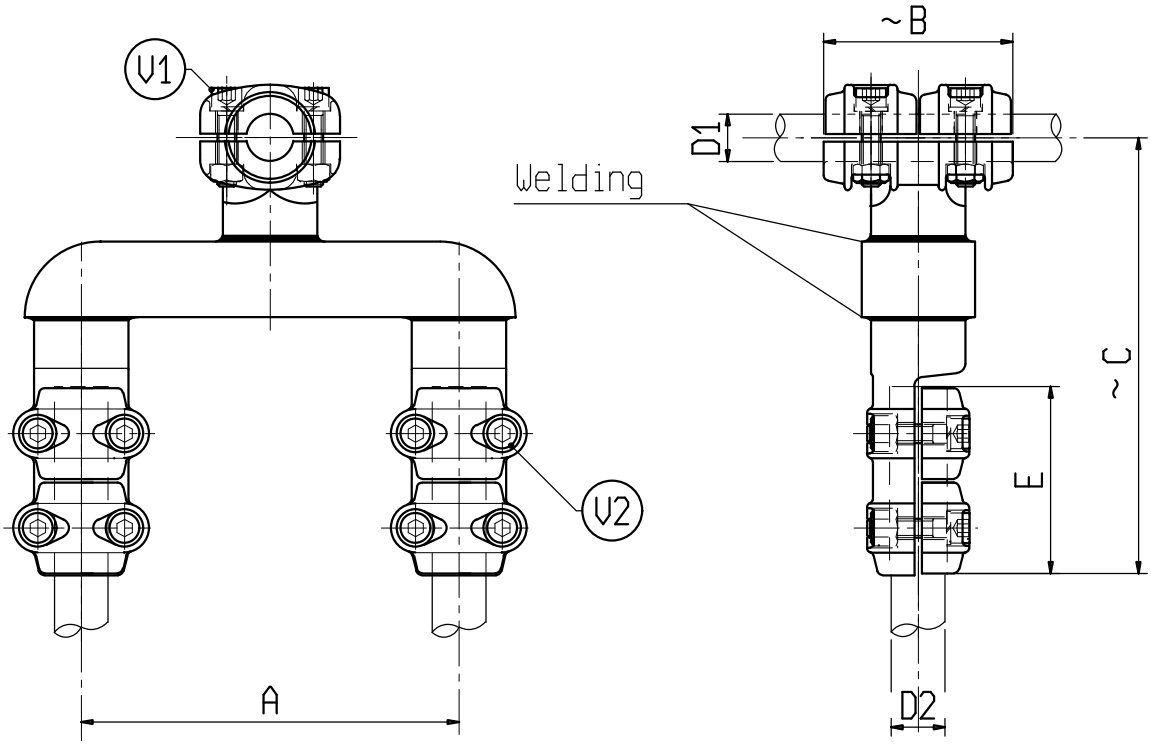

Material: Aluminium alloy

Bolts: Stainless steel

X	ø CONDUCTOR		A	B	C	E	V1	V2	X	ø CONDUCTOR		A	B	C	E	V1	V2
	D1	D2								D1	D2						
C0152AA	32-36	32-36	200	100	230	100	M10	M10									

s.r.l. GORLA MORSETTERIE MILANO TECHNICAL OFFICE	T CONNECTOR FOR LONGITUDINAL Al CONDUCTOR RUN AND DOUBLE Al CONDUCTOR TAP	DRG. N. 77/AA/X SCALE .
		DRAWN . / DATE .
		APPROVED . / DATE .

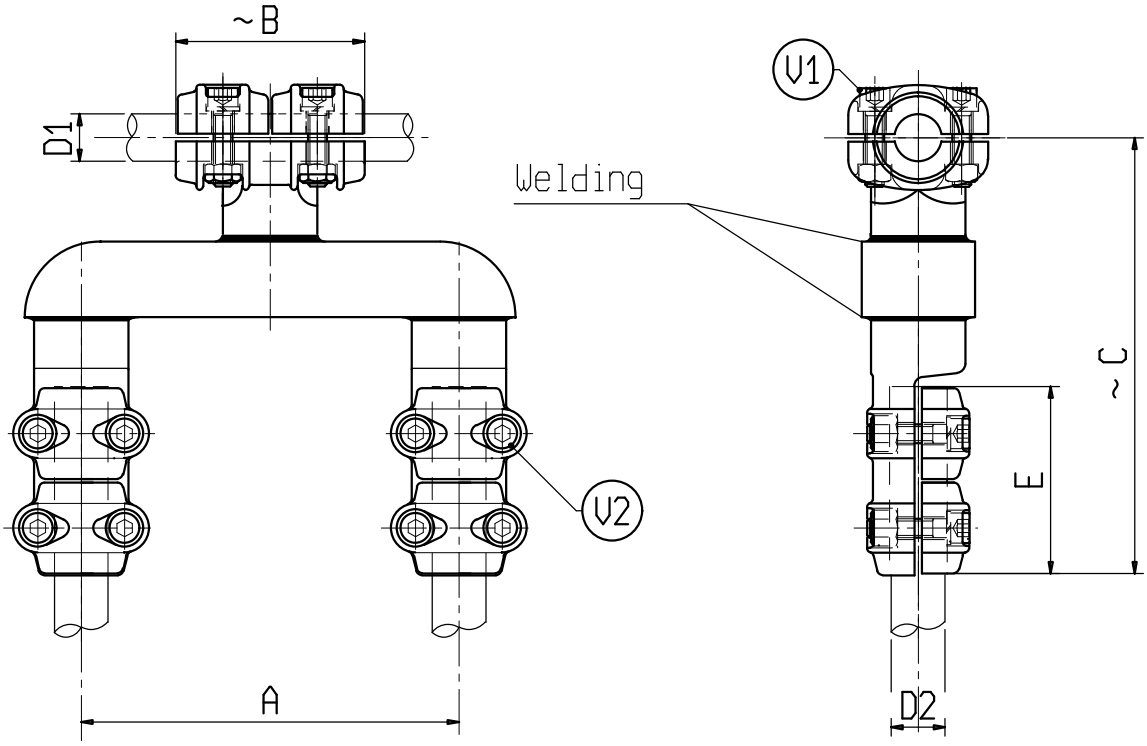

Material: Aluminium alloy

Bolts: Stainless steel

X	ø CONDUCTOR		A	B	C	E	V1	V2	X	ø CONDUCTOR		A	B	C	E	V1	V2
	D1	D2								D1	D2						
C0155AA	32-36	32-36	200	100	230	100	M10	M10									