s.r.l. GORLA MORSETTERIE MILANO TECHNICAL OFFICE	T CONNECTOR FOR DOUBLE Al CONDUCTOR RUN AND Cu STUD TAP	DRG. N. 65/AB/X SCALE . DRAWN . / DATE . APPROVED . / DATE .

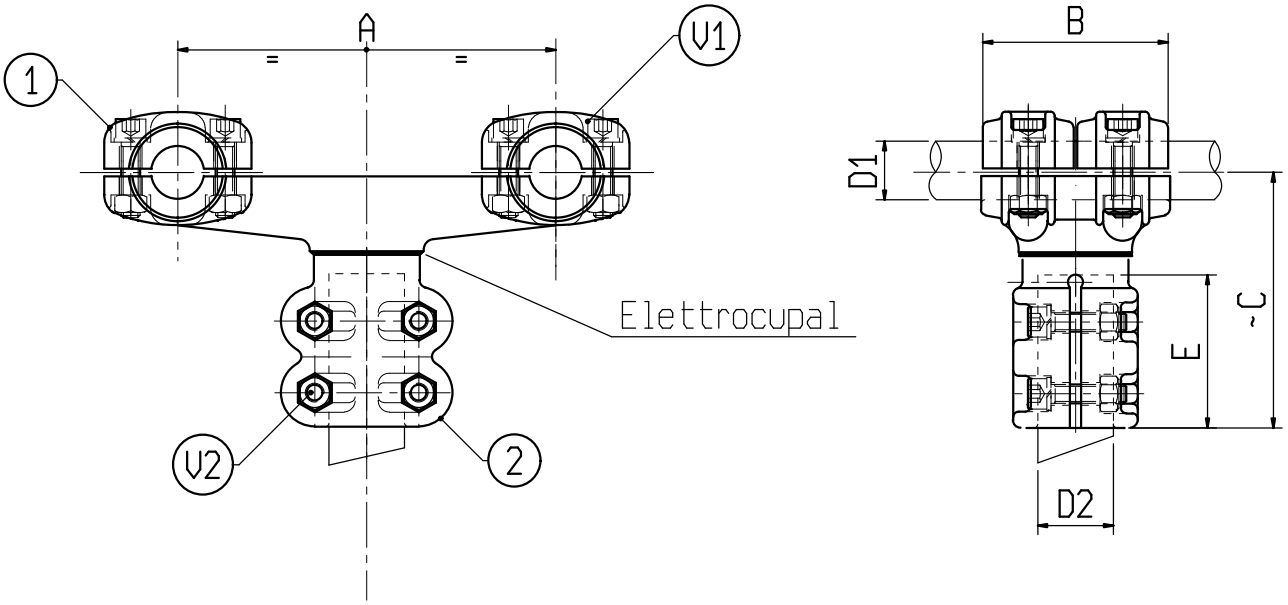

Material: 1 Aluminium alloy; 2 Copper alloy

Bolts: Stainless steel

X	ø CONDUCTOR		A	B	C	E	V1	V2	X	ø CONDUCTOR		A	B	C	E	V1	V2
	D1	D2								D1	D2						
C6716ABC	32-36	40	200	100	190	80	M10	M10									