s.r.l. GORLA
MORSETTERIE
MILANO

TECHNICAL OFFICE

BUS SUPPORT
AND 90° CONNECTOR
FOR Al CONDUCTOR

DRG. N. 63/AA/X

Rev.2 dated 30.09.21

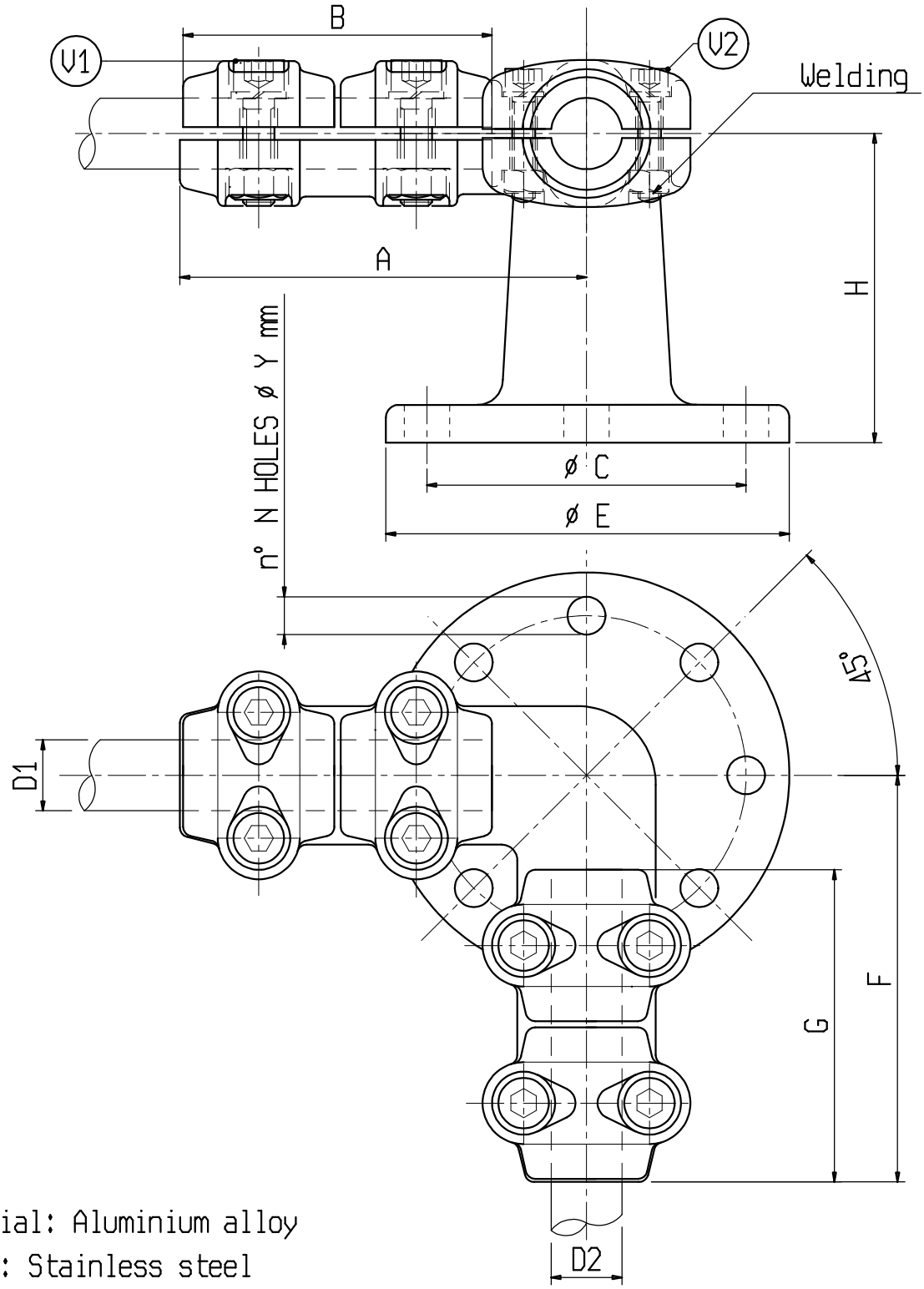

Material: Aluminium alloy
Bolts: Stainless steel

X	ø COND.		A	B	C	E	F	G	H	N	Y	V1	V2
	D1	D2											
C 1333AA	32-36	32-36	132	100	127	160	132	100	110	8	18	M10	M10
C 0269AA	32-36	36-40	132	100	127	160	132	100	110	8	18	M10	M10
C 1673AA	36-40	36-40	132	100	127	160	132	100	110	8	18	M10	M10