s.r.l. GORLA MORSETTERIE MILANO TECHNICAL OFFICE	45° CONNECTOR FOR Al CONDUCTOR	DRG. N. 60/AA/X	
		SCALE .	
		DRAWN .	DATE .
		APPROVED .	DATE .

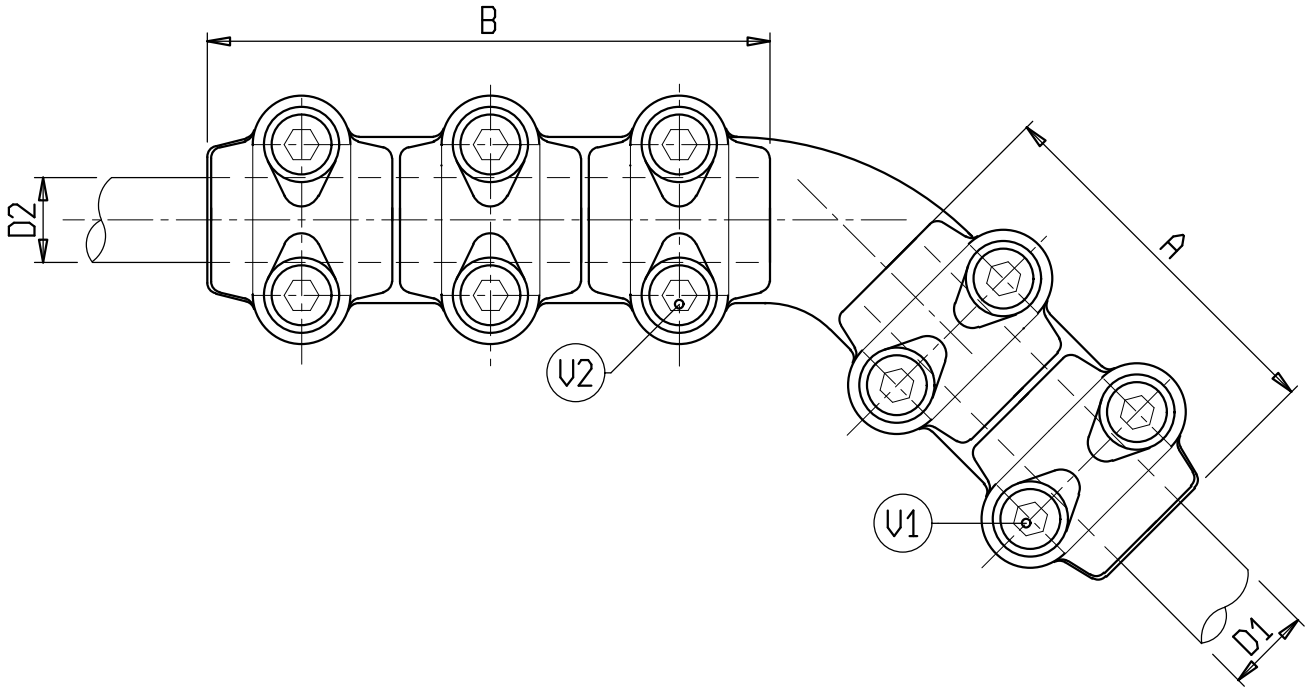

Material: Aluminium alloy

Bolts: Stainless steel

X	ø CONDUCTOR		A	B	V1	V2	X	ø CONDUCTOR		A	B	V1	V2
	D1	D2						D1	D2				
C 6083GAL	25-32	15-20	100	150	M10	M10							
C 6081GAL	25-32	20-25	100	150	M10	M10							

s.r.l. GORLA
MORSETTERIE
MILANO

TECHNICAL OFFICE

45° CONNECTOR
PER Al CONDUCTOR

DRG. N. 64/AA/X

Rev.3 dated 14.11.22

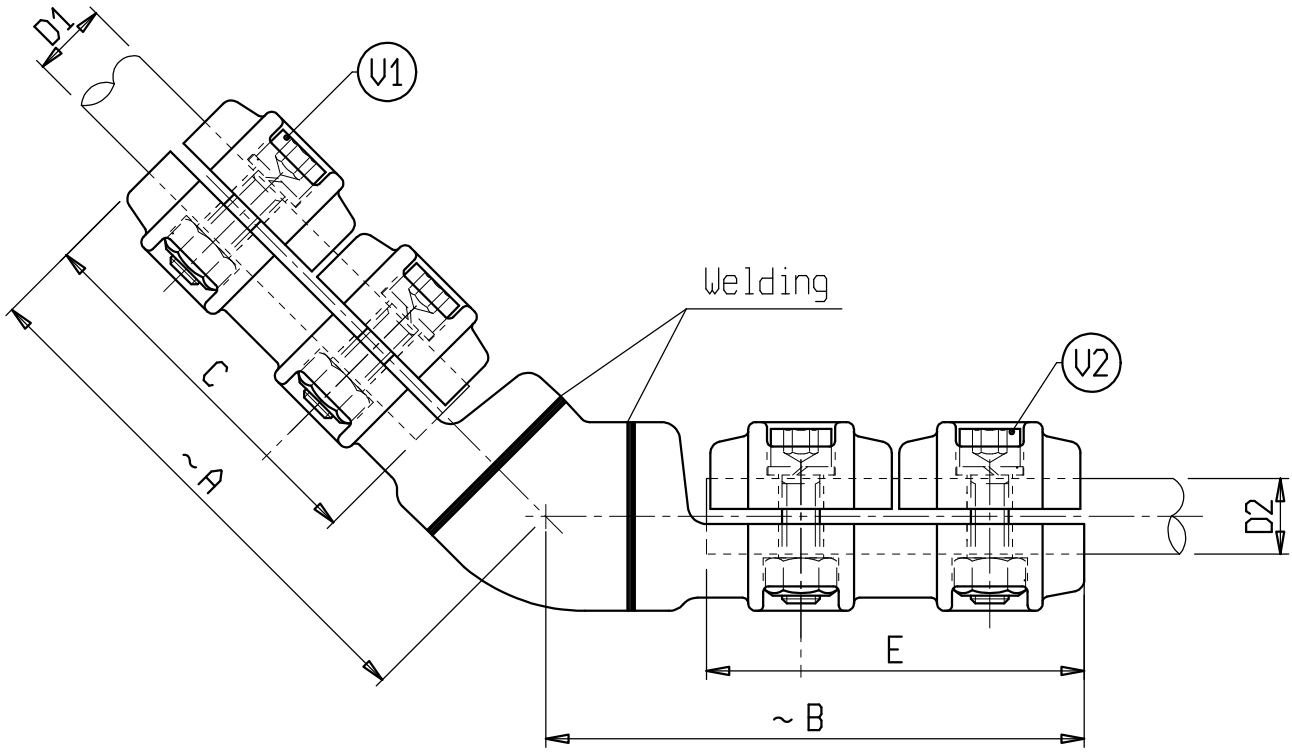

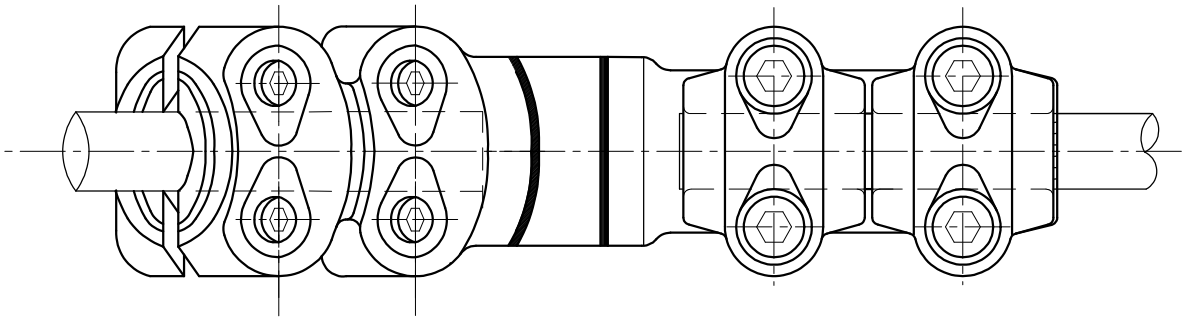

Material: Aluminium alloy
Bolts: Stainless steel

X	ø CONDUCTOR		A	B	C	E	V1	V2	X	ø CONDUCTOR		A	B	C	E	V1	V2
	D1	D2								D1	D2						
C 6558AA	25-32	25-32	135	135	100	100	M10	M10									
C 0097AA	36-40	20-25	150	135	100	100	M10	M10									
C 1156AA	36-40	25-32	150	135	100	100	M10	M10									
C 1665AA	36-40	32-36	150	135	100	100	M10	M10									
C 1670AA	36-40	36-40	150	135	100	100	M10	M10									
C 1740AA	55-60	55-60	150	135	100	100	M10	M10									