s.r.l. GORLA MORSETTERIE MILANO TECHNICAL OFFICE	STRAIGHT TERMINAL FOR Cu CONDUCTOR AND Al PLATE	DRG. N. 58/AB/X SCALE . DRAWN . / DATE . APPROVED . / DATE .

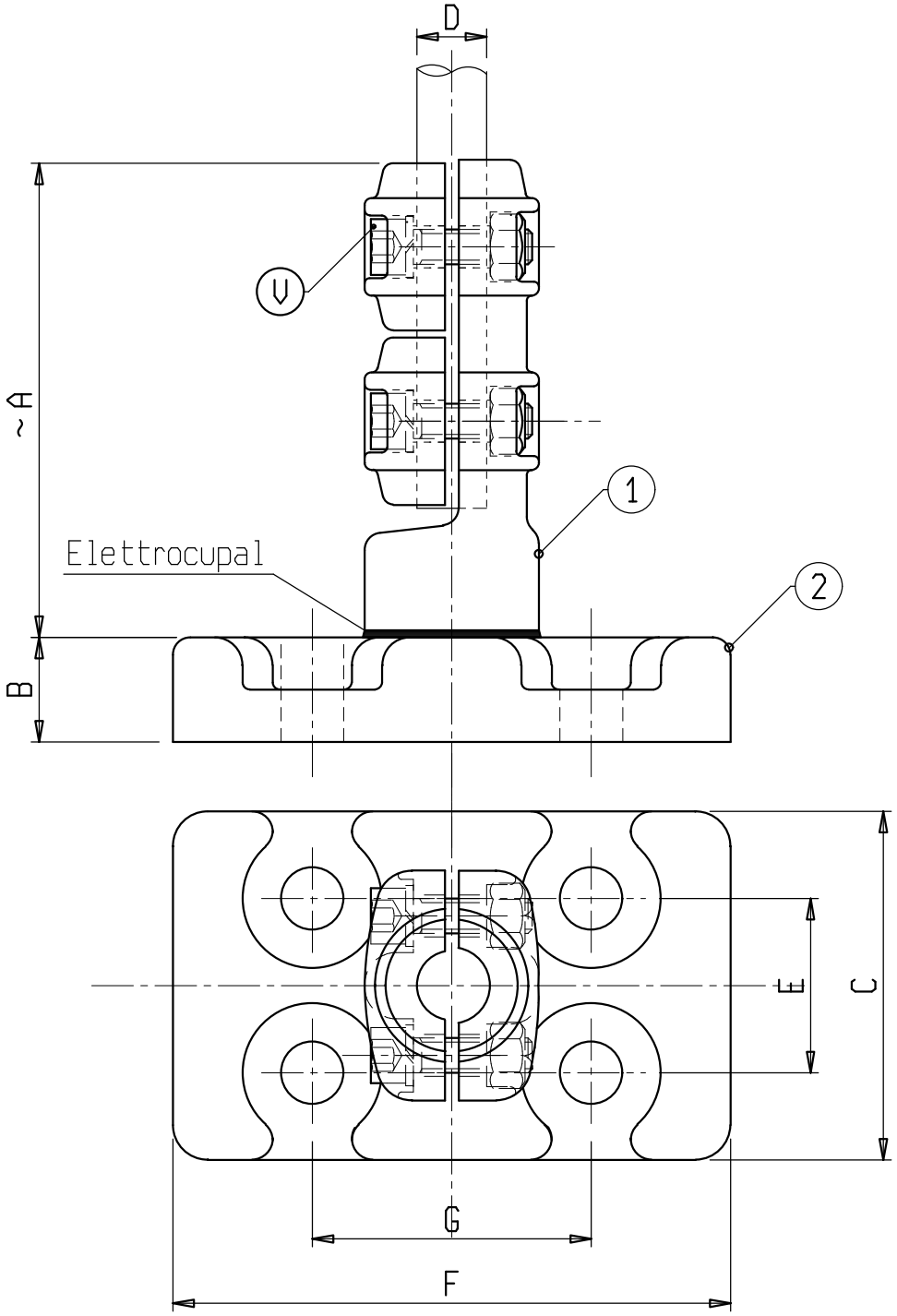

Material: 1 Copper alloy; 2 Aluminium alloy

Bolts: Stainless steel

X	ø COND. D	A	B	C	E	F	G	V	X	ø COND. D	A	B	C	E	F	G	V
C 6943AB	12-20	185	30	100	50	160	80	M10									
C 1287AB	20-25	185	30	100	50	160	80	M10									
C 6520AB	25-32	185	30	100	50	160	80	M10									