s.r.l. GORLA
MORSETTERIE
MILANO

TECHNICAL OFFICE

STRAIGHT TERMINAL
FOR Al CONDUCTOR AND Al PLATE

DRG. N. 58/AA/X

Rev.2 dated 31.01.19

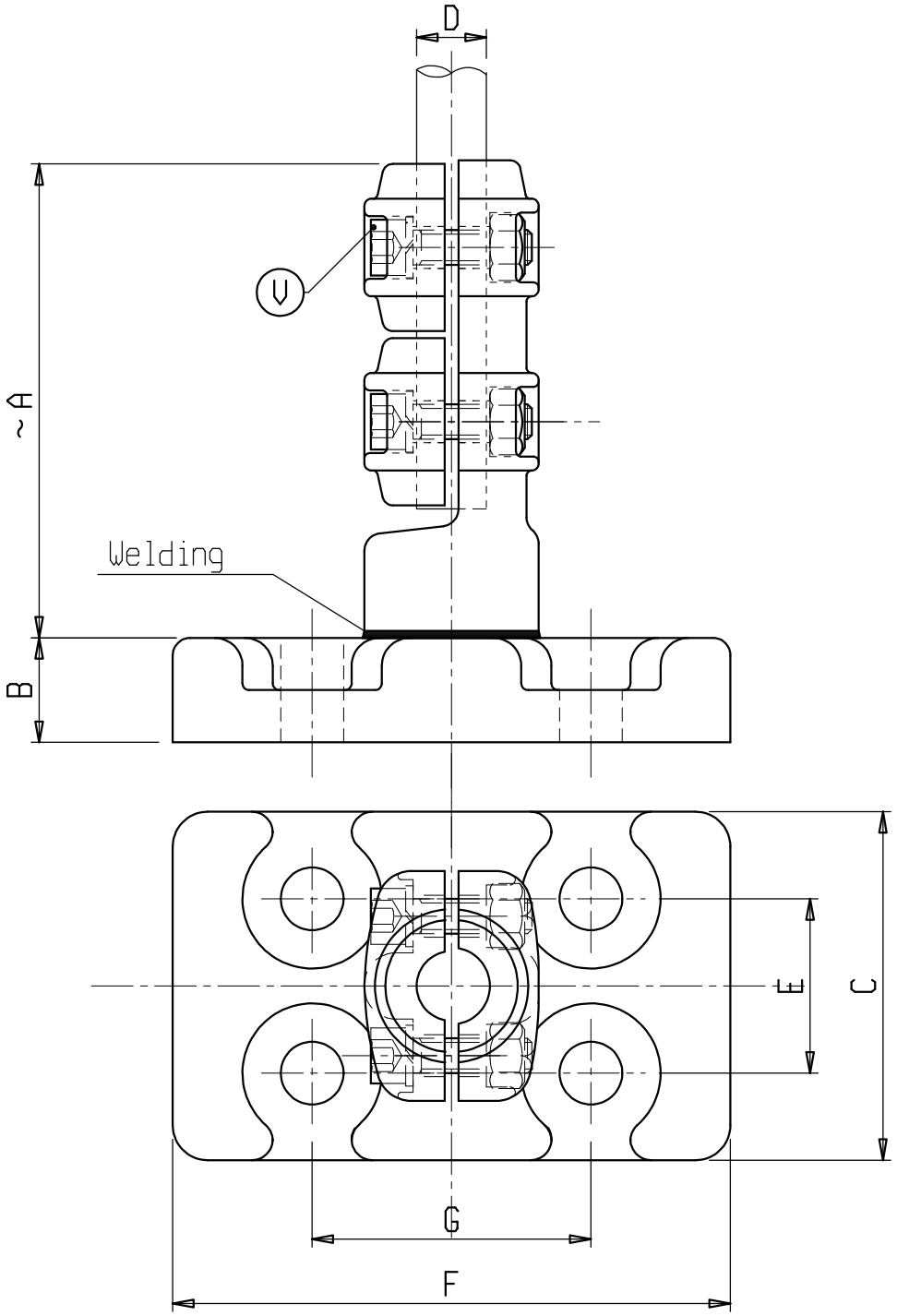

Material: Aluminium alloy

Bolts: Stainless steel

X	ø COND. D	A	B	C	E	F	G	V	X	ø COND. D	A	B	C	E	F	G	V
C 6943AA	12-20	185	30	100	50	160	80	M10	C 022540AA	36-40	185	30	100	50	160	80	M10
C 1287GAL	20-25	185	30	100	50	160	80	M10									
C 6520AA	25-32	185	30	100	50	160	80	M10									
C 0225AA	32-36	185	30	100	50	160	80	M10									