s.r.l. GORLA MORSETTERIE MILANO TECHNICAL OFFICE	STRAIGHT CONNECTOR FOR Cu CONDUCTOR BOLT TYPE AND Al CONDUCTOR COMPRESSION TYPE	DRG. N. 52/BA/X SCALE .
		DRAWN . / DATE .
		APPROVED . / DATE .

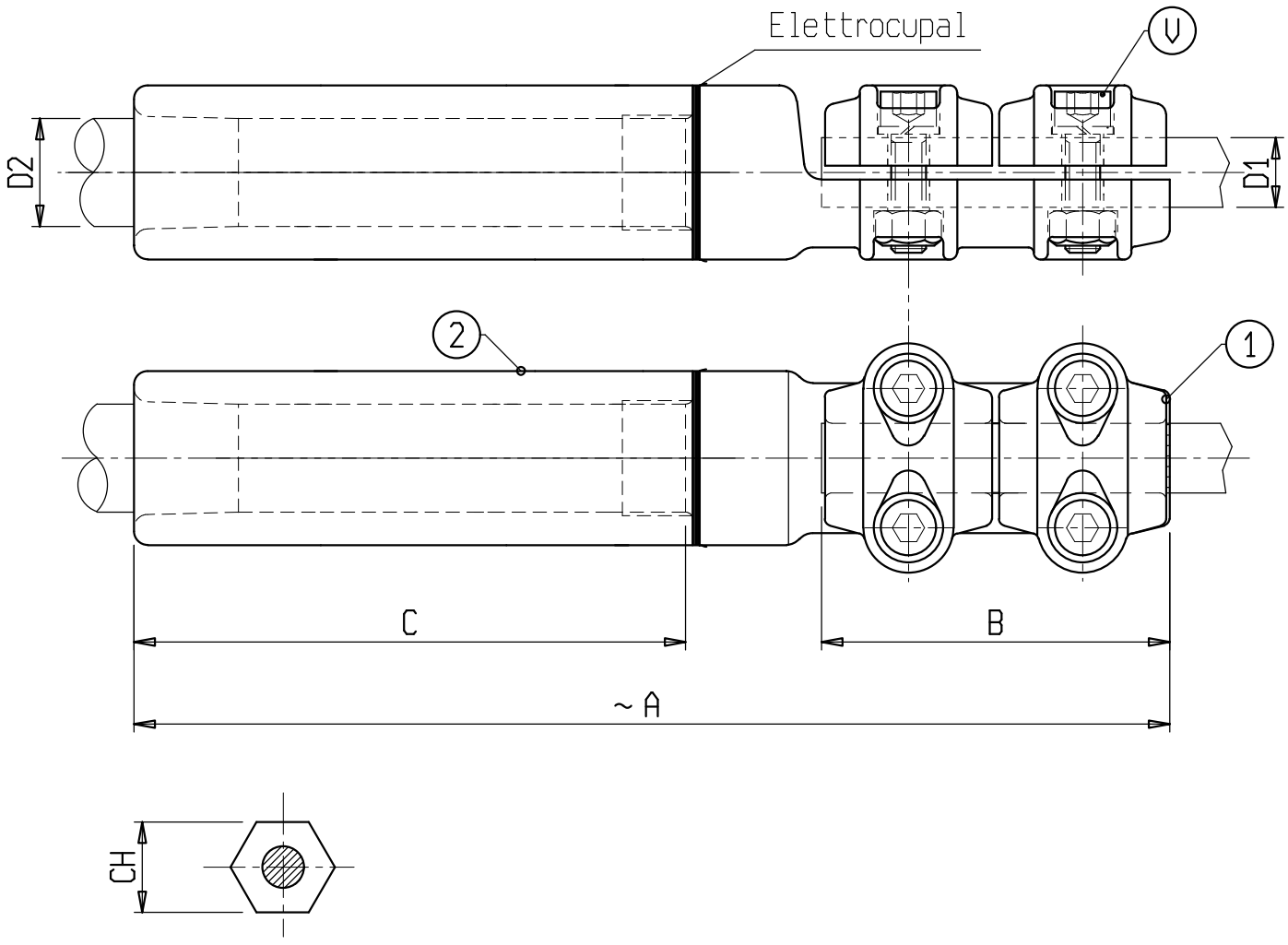

Material: 1 Copper alloy; 2 Aluminium alloy

Bolts: Stainless steel

X	ø CONDUCTOR		A	B	C	V	CH	X	ø CONDUCTOR		A	B	C	V	CH
	D1	D2							D1	D2					
C 0104BAC	32-36	32-35	280	100	145	M10	54								
C 6020BAC	36-40	35-37	280	100	145	M10	54								