s.r.l. GORLA
MORSETTERIE
MILANO

TECHNICAL OFFICE

STRAIGHT CONNECTOR
FOR Al CONDUCTOR BOLT TYPE
AND Al CONDUCTOR COMPRESSION TYPE

DRG. N. 52/AA/X

Rev.2 dated 19.05.21

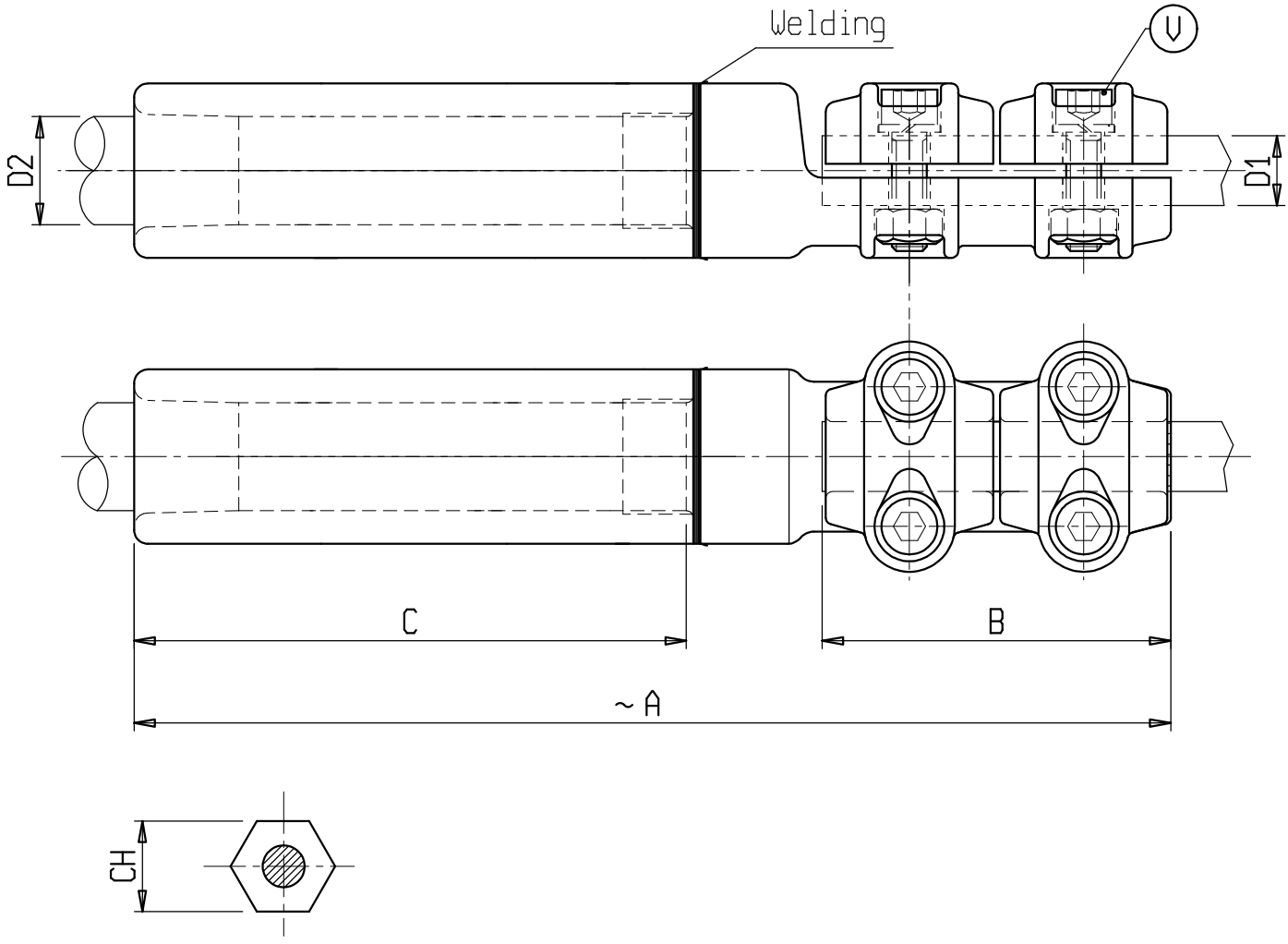

Material: Aluminium alloy

Bolts: Stainless steel

X	ø CONDUCTOR		A	B	C	V	CH	X	ø CONDUCTOR		A	B	C	V	CH
	D1	D2							D1	D2					
C 0104AAC	32-36	34.6	280	100	145	M10	51								
C 1666AAC	36-40	27.5-30.5	280	100	145	M10	44								
C 6020AAC	36-40	35.5-37.5	280	100	145	M10	54								