s.r.l. GORLA MORSETTERIE MILANO TECHNICAL OFFICE	T CONNECTOR FOR DOUBLE Al CONDUCTOR RUN AND Al CONDUCTOR TAP	DRG. N. 51/AA/X SCALE . DRAWN . / DATE . APPROVED . / DATE .

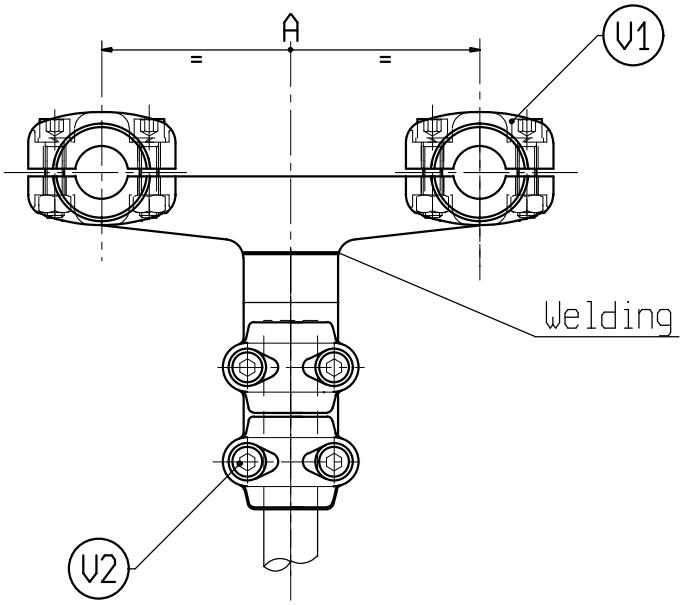

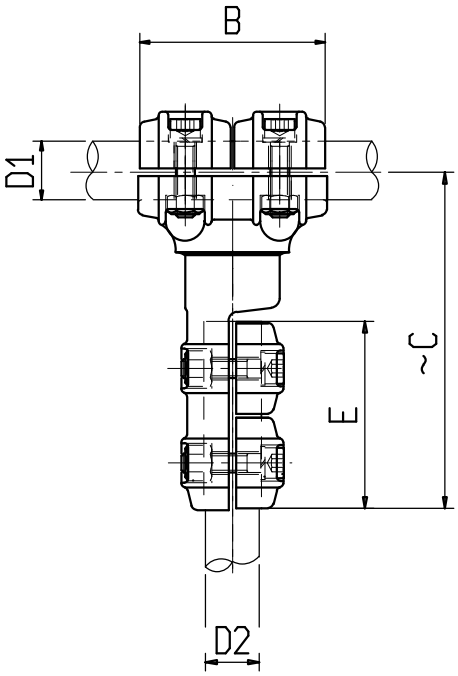

Material: Aluminium alloy

Bolts: Stainless steel

X	ø CONDUCTOR		A	B	C	E	V1	V2	X	ø CONDUCTOR		A	B	C	E	V1	V2
	D1	D2								D1	D2						
C0151AA	32-36	32-36	200	100	180	100	M10	M10									
C0931AA	32-36	32-36	400	100	180	100	M10	M10									