s.r.l. GORLA MORSETTERIE MILANO TECHNICAL OFFICE	90° CONNECTOR FOR Cu FLAT AND Al CONDUCTOR COMPRESSION TYPE	DRG. N. 46/BA/X SCALE . DRAWN . / DATE . APPROVED . / DATE .

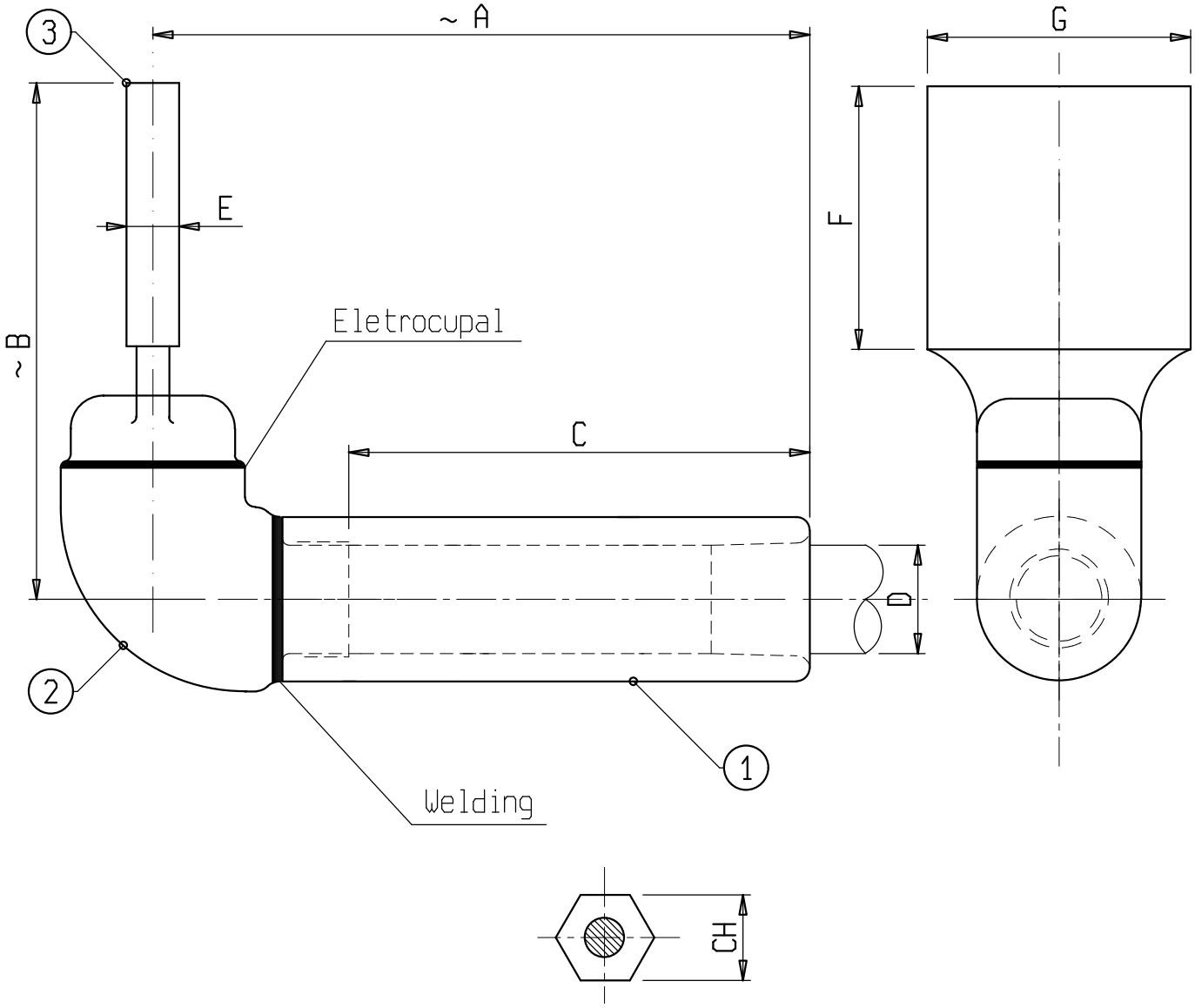

Material: 1 Aluminium alloy; 2 Copper alloy

Bolts: Stainless steel

X	ø COND. D	A	B	C	E	F	G	CH	X	ø COND. D	A	B	C	E	F	G	CH
C 1159BAC	15-16,5	230	120	145	15	100	100	25,5									