s.r.l. GORLA MORSETTERIE MILANO TECHNICAL OFFICE	90° CONNECTOR FOR Al FLAT AND Al CONDUCTOR COMPRESSION TYPE	DRG. N. 46/AA/X SCALE . DRAWN . / DATE . APPROVED . / DATE .

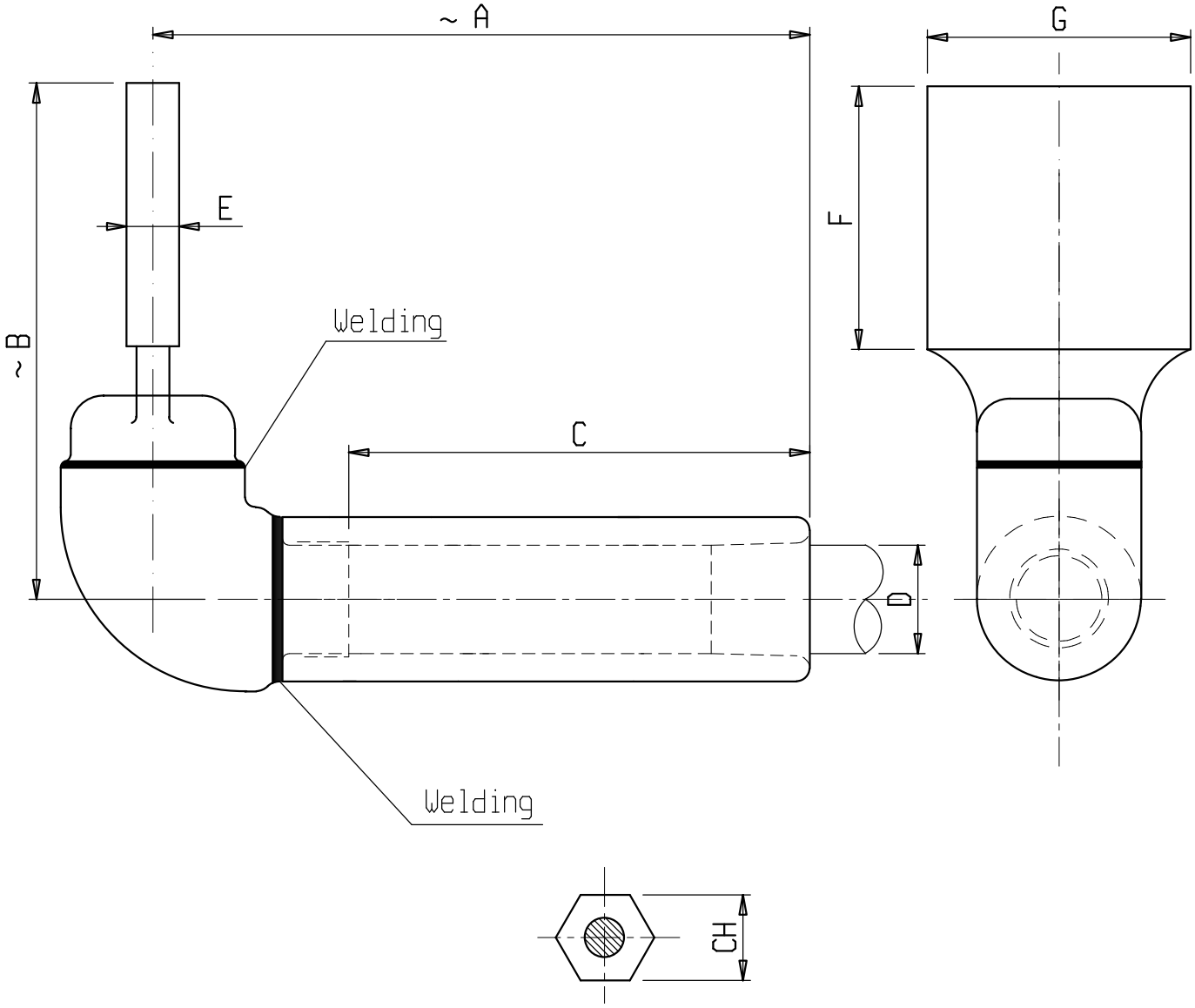

Material: Aluminium alloy

Bolts: Stainless steel

X	ø COND. D	A	B	C	E	F	G	CH	X	ø COND. D	A	B	C	E	F	G	CH
C 1159AAC	15-16,5	230	120	145	15	100	100	25,5									
C 0116AAP	35-37	230	120	145	15	100	100	54									
C 6842AAP	35-37	230	125	145	14	105	185	54									
C 6858AAP	35-37	230	140	145	15	120	120	54									