s.r.l. GORLA
MORSETTERIE
MILANO

TECHNICAL OFFICE

STRAIGHT CONNECTOR
FOR Cu FLAT
AND Al CONDUCTOR
COMPRESSION TYPE

DRG. N. 45/BA/X

Rev.1 dated 20.03.19

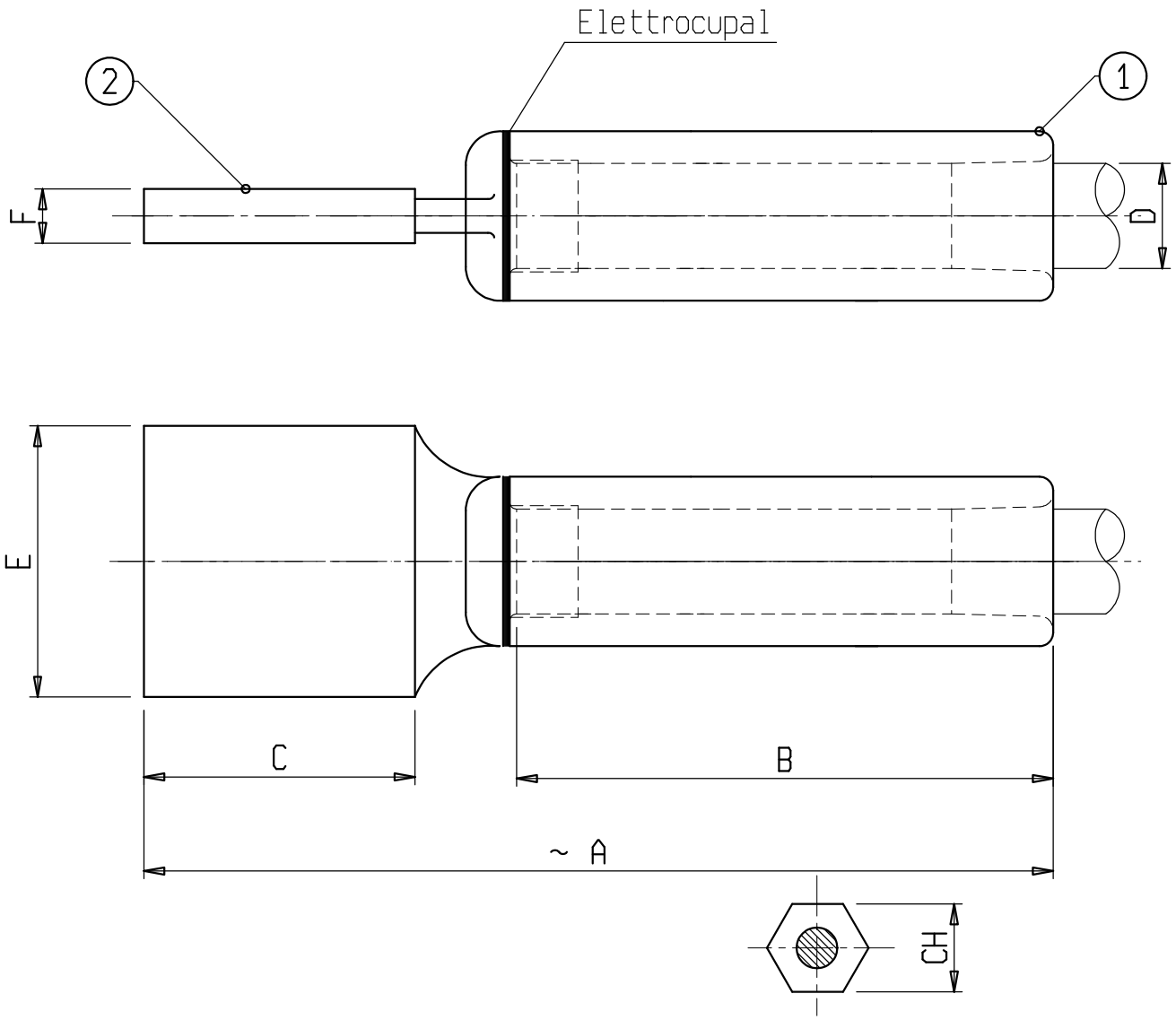

Material: 1 Aluminium alloy; 2 Copper alloy
Bolts: Stainless steel

X	ø COND. D	A	B	C	E	F	CH	X	ø COND. D	A	B	C	E	F	CH
C 1158BAC	14-17	290	145	100	100	15	25,5								
C 1616BAC	35,5-37,5	270	145	80	60	14	54								