s.r.l. GORLA
MORSETTERIE
MILANO

TECHNICAL OFFICE

STRAIGHT CONNECTOR
FOR Al FLAT
AND Al CONDUCTOR
COMPRESSION TYPE

DRG. N. 45/AA/X

Rev.3 dated 22.09.22

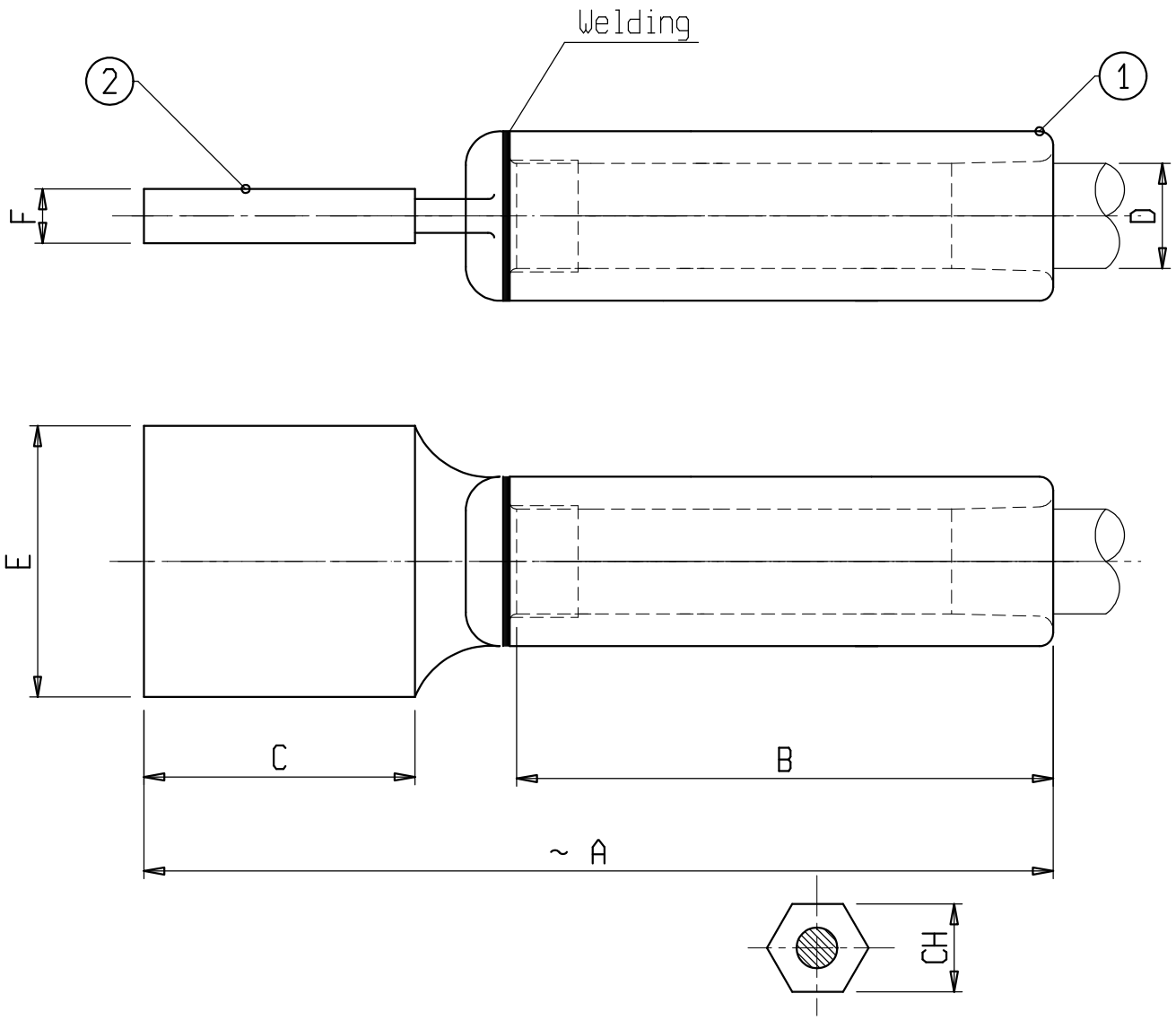

Material: Aluminium alloy

Bolts: Stainless steel

X	ø COND. D	A	B	C	E	F	CH	X	ø COND. D	A	B	C	E	F	CH
C 1158AAC	14-17	290	145	100	100	15	25,5	C 1455AAC	35.5-37.5	295	145	105	160	14	54
C 6758AAP	30.5-32.5	310	145	120	120	20	44	C 1732AAC	35.5-37.5	290	145	100	160	15	54
C 0136AAC	35.5-37.5	290	145	100	100	15	54								
C 1454AAC	35.5-37.5	310	145	120	100	10	54								