s.r.l. GORLA
MORSETTERIE
MILANO

TECHNICAL OFFICE

STRAIGHT CONNECTOR
FOR Al STUD
AND DOUBLE Al CONDUCTOR
COMPRESSION TYPE

DRG. N. 42/AA/X

Rev.1 dated 18.02.16

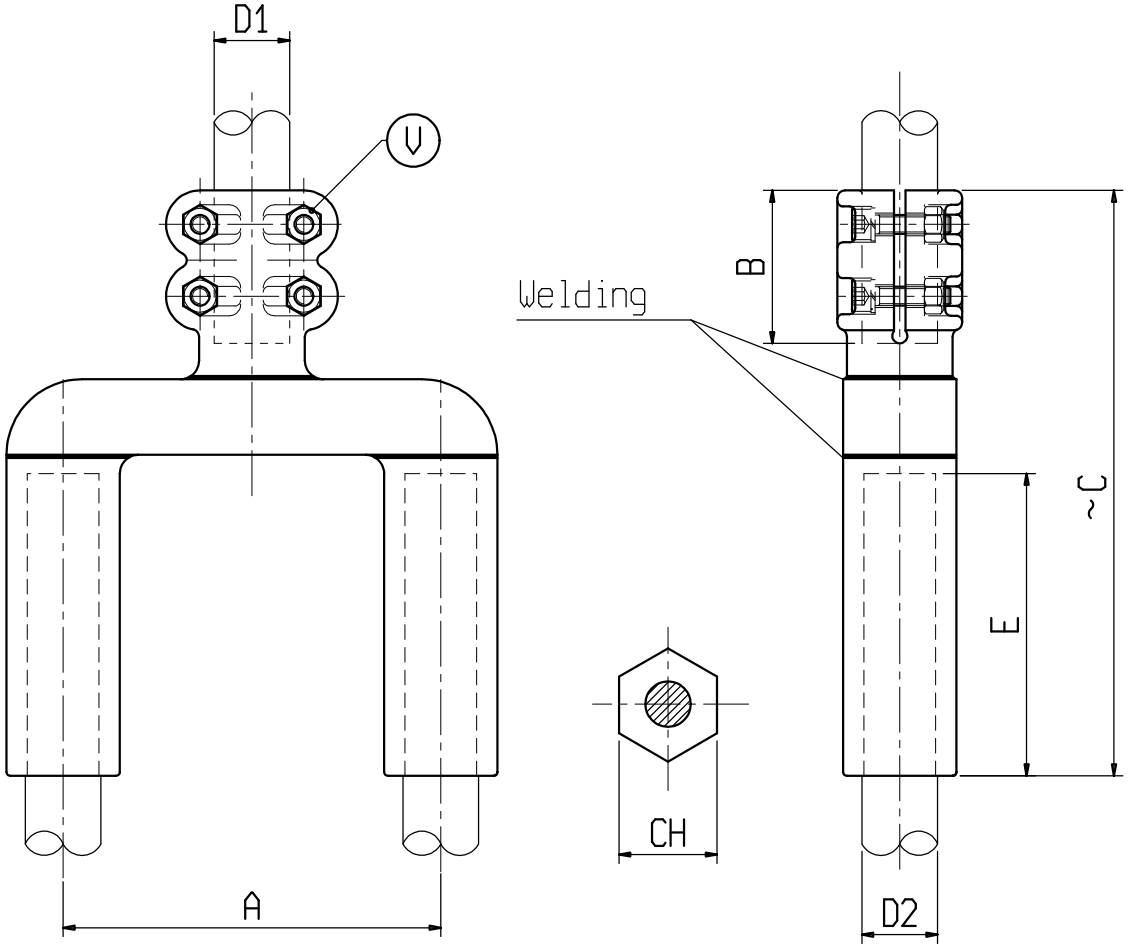

Material: Aluminium alloy

Bolts: Stainless steel

X	ø CONDUCTOR		A	B	C	E	V	CH	X	ø CONDUCTOR		A	B	C	E	V	CH
	D1	D2								D1	D2						
C1054AAC	40	35-37	100	80	310	145	M10	54	C1482AAC	60	41,1	200	80	370	170	M10	60
C6238AAC	40	30-32	200	80	310	145	M10	44									
C6217AAC	40	35-37	200	80	310	145	M10	54									