s.r.l. GORLA
MORSETTERIE
MILANO

TECHNICAL OFFICE

EXPANSION STRAIGHT CONNECTOR FOR Al FLAT AND Al TUBE

DRG. N. 38/AA/X

Rev.1 dated 03.03.20

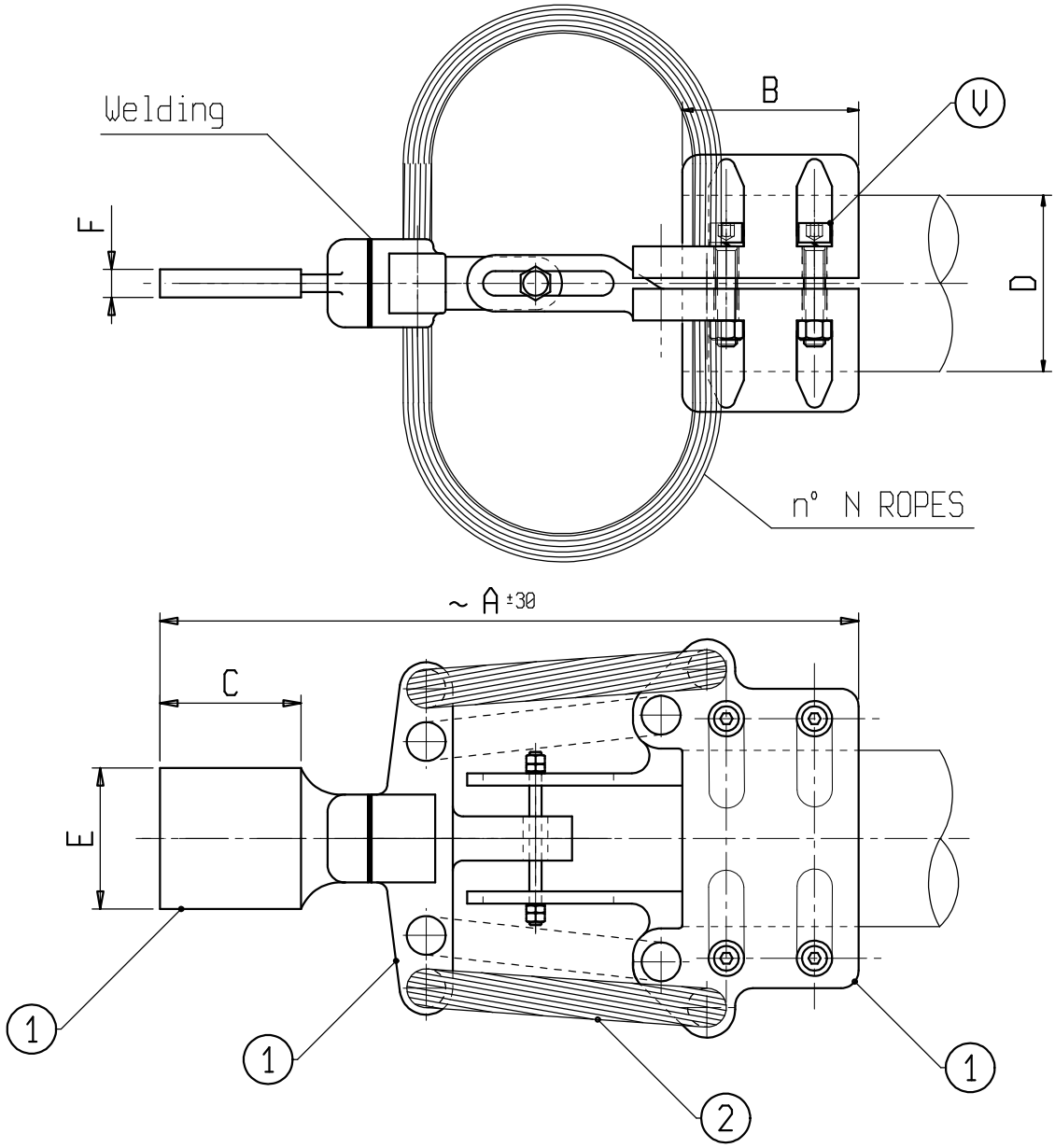

Material: 1 Aluminium alloy; 2 Aluminium

Bolts: Stainless steel

X	ø COND. D	A	B	C	E	F	N	V	X	ø COND. D	A	B	C	E	F	N	V
C 6668AA	40	430	100	100	100	10	2	M10	C 6631AA	100	430	100	100	100	16	4	M12
C 6668-120AA	40	450	100	120	100	10	2	M10									
C 1036AA	70	430	100	100	100	16	2	M10									

s.r.l. GORLA
MORSETTERIE
MILANO

TECHNICAL OFFICE

EXPANSION STRAIGHT CONNECTOR FOR Al VERTICAL FLAT AND Al TUBE

DRG. N. 81/AA/X

Rev.1 dated 10.11.06

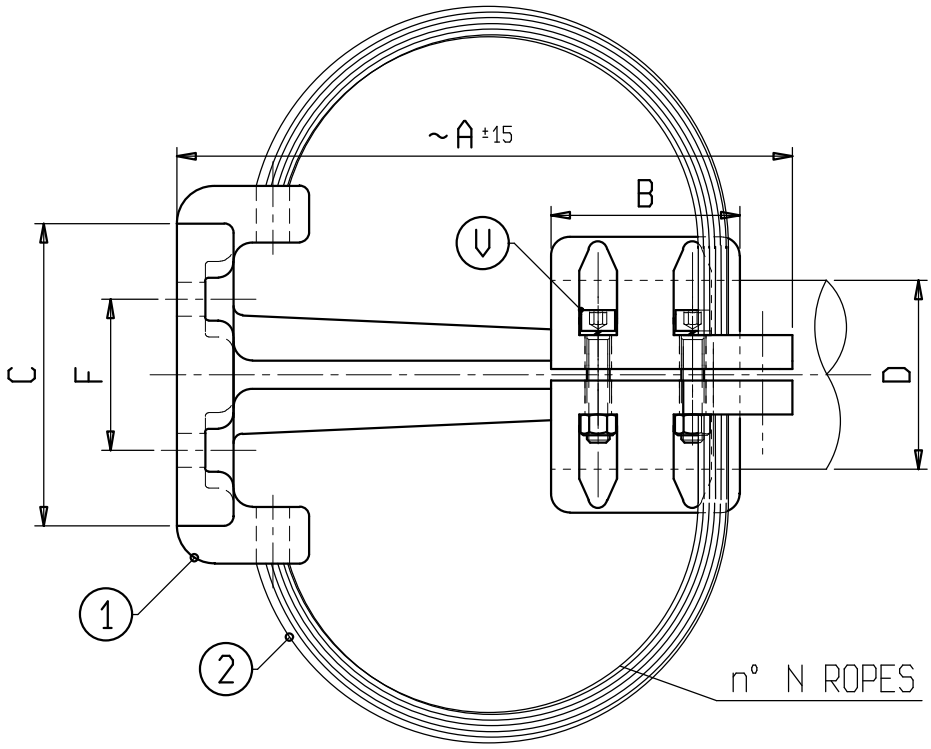

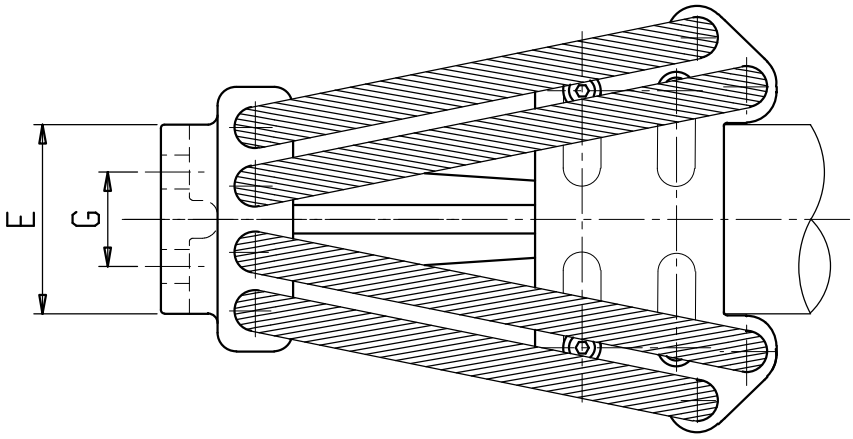

Material: 1 Aluminium alloy; 2 Aluminiim

Bolts: Stainless steel

X	ø COND. D	A	B	C	E	F	G	N	V	X	ø COND. D	A	B	C	E	F	G	N	V
C 0199AA	80	330	100	160	100	80	50	4	M10										
C 0197AA	100	330	100	160	100	80	50	4	M12										