s.r.l. GORLA MORSETTERIE MILANO TECHNICAL OFFICE	EXPANSION STRAIGHT CONNECTOR FOR Al STUD AND Al TUBE	DRG. N. 37/AA/X SCALE . DRAWN . / DATE . APPROVED . / DATE .

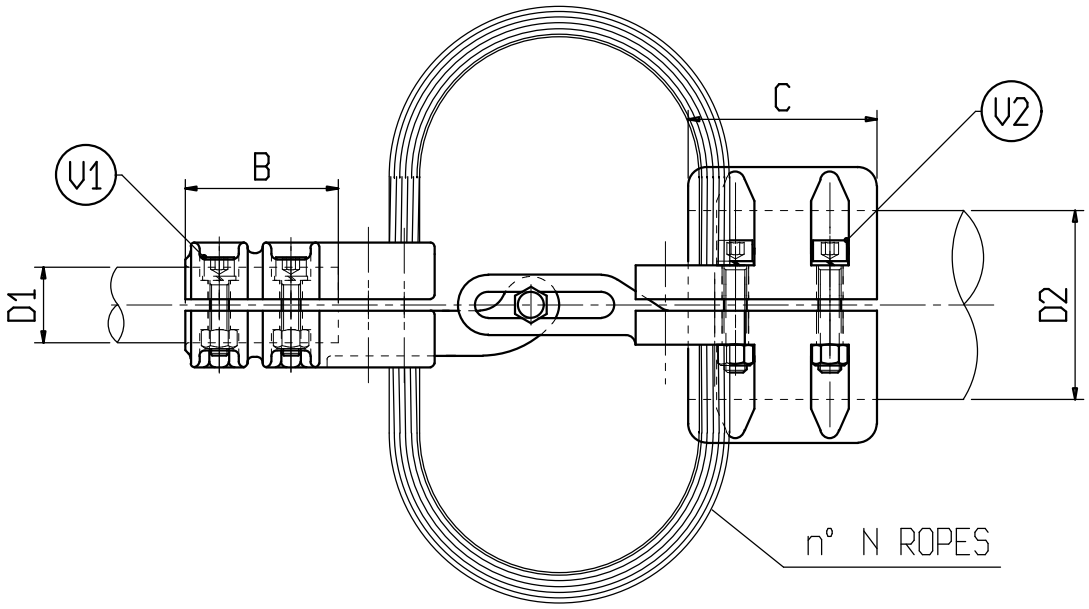

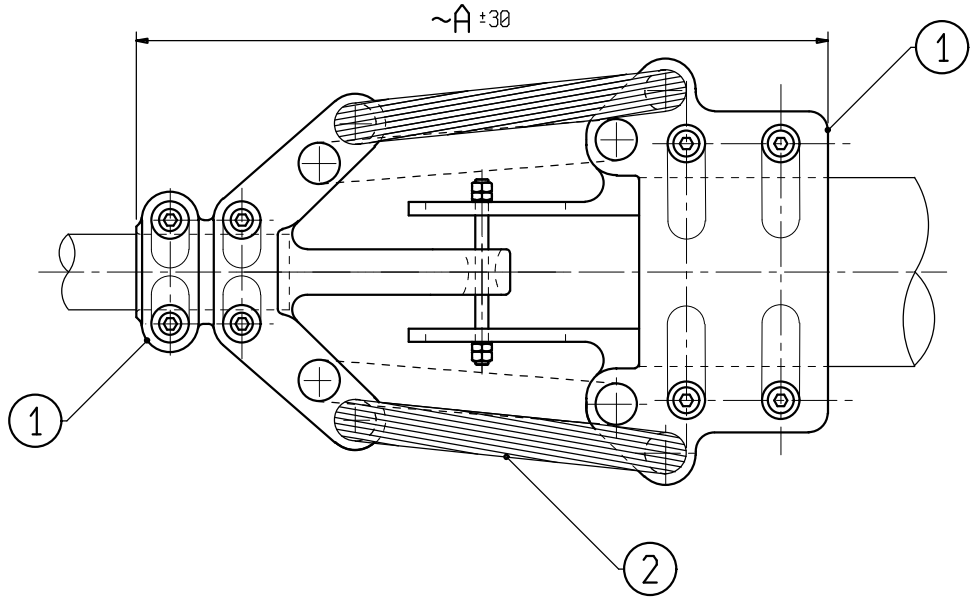

Material: 1 Aluminium alloy; 2 Aluminium

Bolts: Stainless steel

X	ø CONDUCTOR		A	B	C	N	V1	V2	X	ø CONDUCTOR		A	B	C	N	V1	V2
	D1	D2								D1	D2						
C 1033AA	30	30	360	75	100	2	M10	M10	C 5296AA	40	40	360	75	100	2	M10	M10
C 6696AA	30	40	360	75	100	2	M10	M10	C 1034AA	40	70	360	75	100	2	M10	M10
C 6701AA	30	70	360	75	100	2	M10	M10	C 6202	40	100	360	75	100	4	M10	M12
C 5980AA	30	100	360	75	100	2	M10	M12									
C 6373AA	40	30	360	75	100	2	M10	M10									