s.r.l. GORLA MORSETTERIE MILANO TECHNICAL OFFICE	EXPANSION STRAIGHT CONNECTOR FOR Al TUBE	DRG. N. 36/AA/X SCALE . DRAWN . / DATE . APPROVED . / DATE .

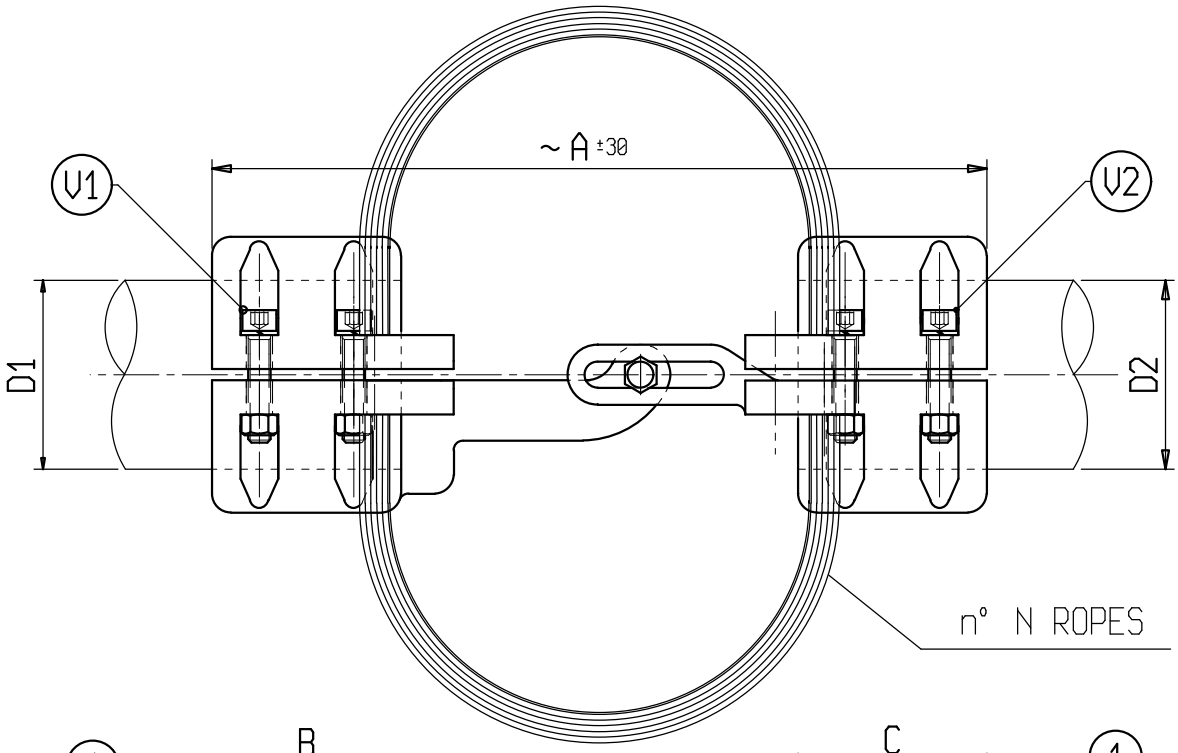

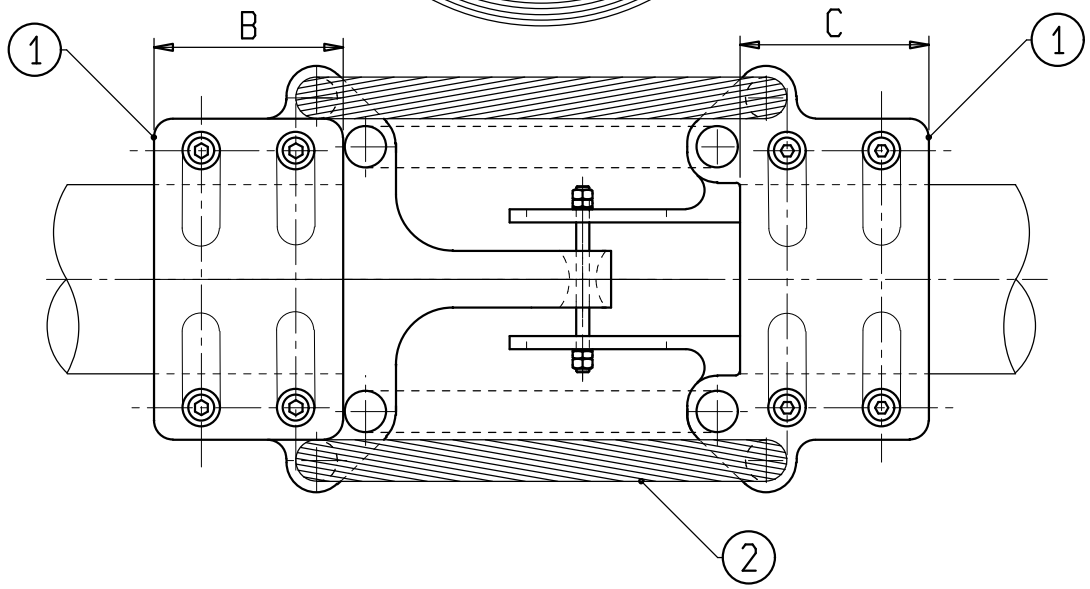

Material: 1 Aluminium alloy; 2 Aluminium

Bolts: Stainless steel

X	ø CONDUCTOR		A	B	C	N	V1	V2	X	ø CONDUCTOR		A	B	C	N	V1	V2
	D1	D2								D1	D2						
C 1031GAL	70	70	400	100	100	2	M10	M10									
C 1032GAL	70	100	400	100	100	2	M10	M12									
C 6619GAL	100	100	400	100	100	2	M12	M12									