s.r.l. GORLA MORSETTERIE MILANO TECHNICAL OFFICE	SLIDING BUS SUPPORT FOR STRAIGHT CONNECTION Al TUBE	DRG. N. 32/AA/X SCALE . DRAWN . / DATE . APPROVED . / DATE .

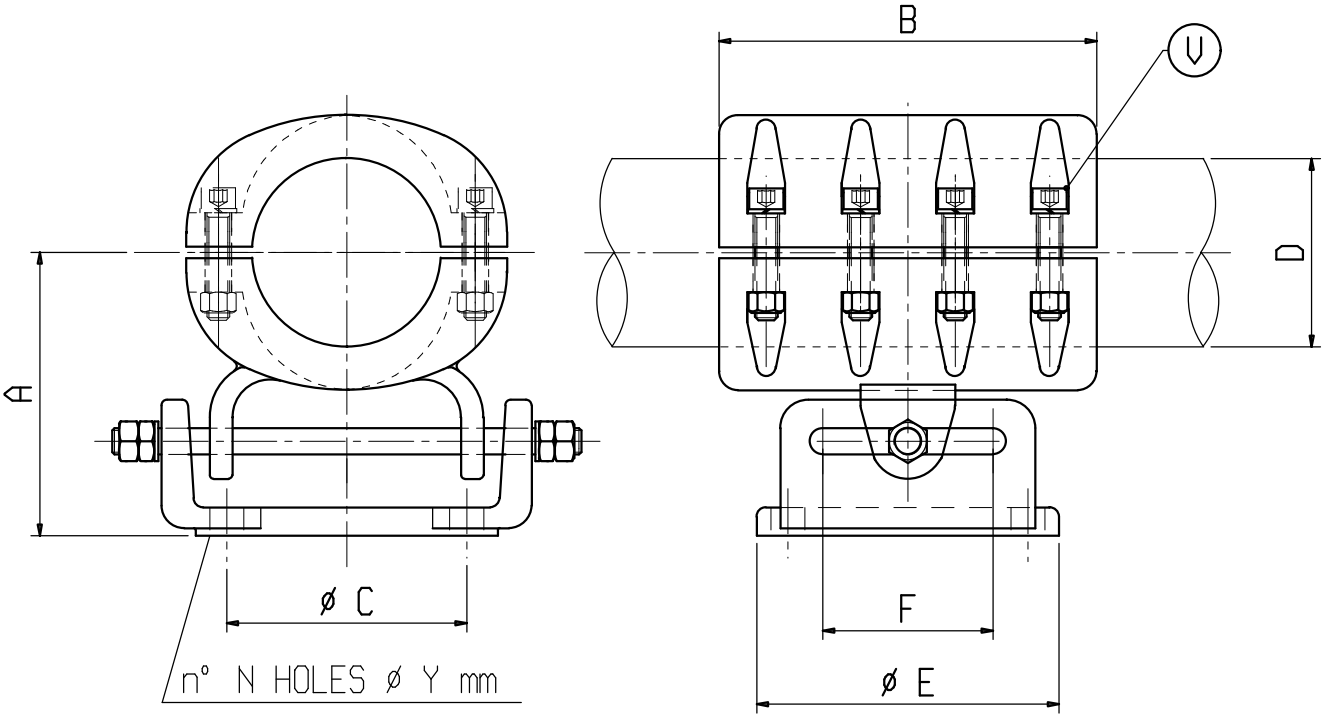

Material: Aluminium alloy

Bolts: Stainless steel

X	ø COND. D	A	B	C	E	F	N	Y	V	X	ø COND. D	A	B	C	E	F	N	Y	V
C 6536	40	150	200	127	160	90	8	18	M10										
C 0493	70	150	200	127	160	90	8	18	M10										
C 6596	100	150	200	127	160	90	8	18	M12										