s.r.l. GORLA MORSETTERIE MILANO TECHNICAL OFFICE	SLIDING BUS SUPPORT FOR Al TUBE	DRG. N. 31/AA/X SCALE . DRAWN . / DATE . APPROVED . / DATE .

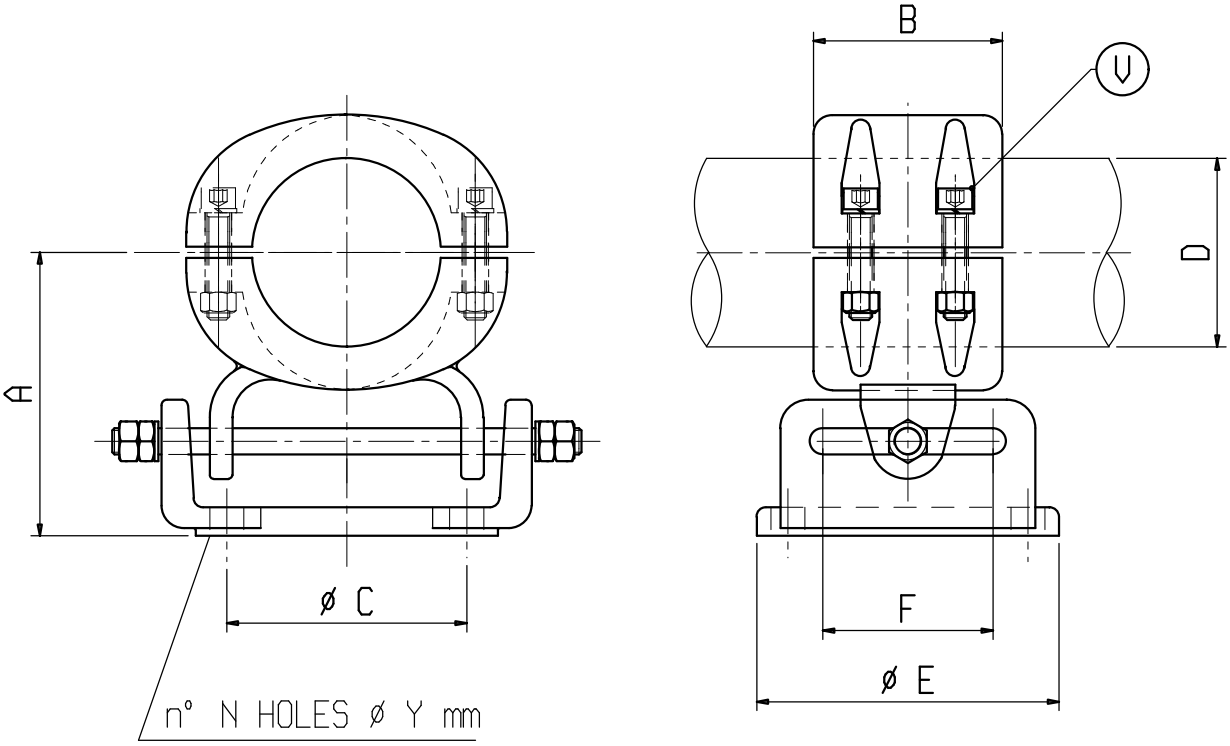

Material: Aluminium alloy

Bolts: Stainless steel

X	ø COND. D	A	B	C	E	F	N	Y	V	X	ø COND. D	A	B	C	E	F	N	Y	V
C 1026GAL	40	150	100	127	160	60	4	18	M10										
C 6512GAL	100	150	100	127	160	60	4	18	M12										