s.r.l. GORLA
MORSETTERIE
MILANO

TECHNICAL OFFICE

BUS SUPPORT
FOR STRAIGHT CONNECTION
Al CONDUCTOR

DRG. N. 30/BB/X

Rev.1 dated 31.08.11

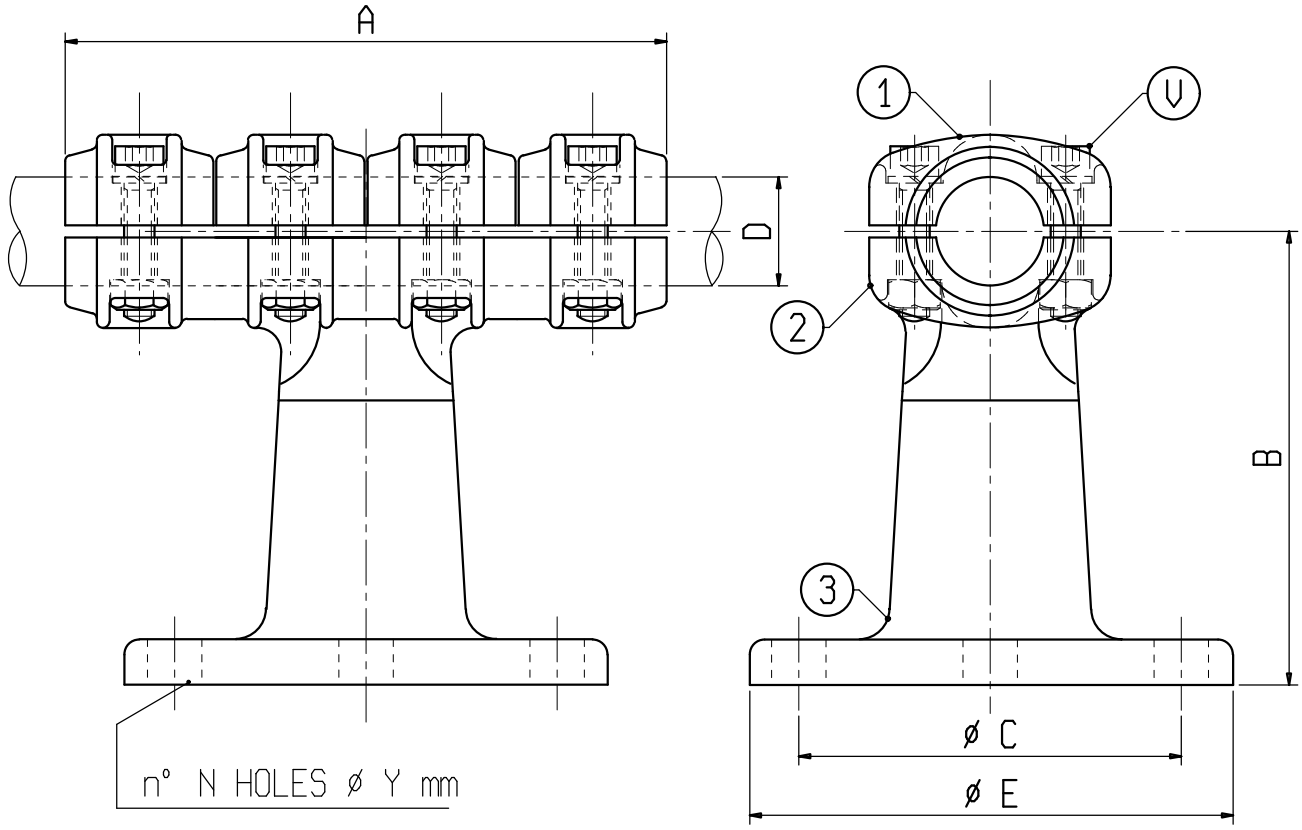

Material: 1 and 2 Copper alloy; 3 hot dip galv.d steel
Bolts: Stainless steel

X	ø COND. D	A	B	C	E	N	Y	V	X	ø COND. D	A	B	C	E	N	Y	V
C 6359BR	12-20	100	110	127	160	8	18	M10									
C 6557BR	20-25	100	110	127	160	8	18	M10									
C 6369BR	25-32	100	110	127	160	8	18	M10									