s.r.l. GORLA MORSETTERIE MILANO TECHNICAL OFFICE	BUS SUPPORT FOR STRAIGHT CONNECTION Al CONDUCTOR	DRG. N. 30/AA/X SCALE DRAWN . / DATE . APPROVED . / DATE .

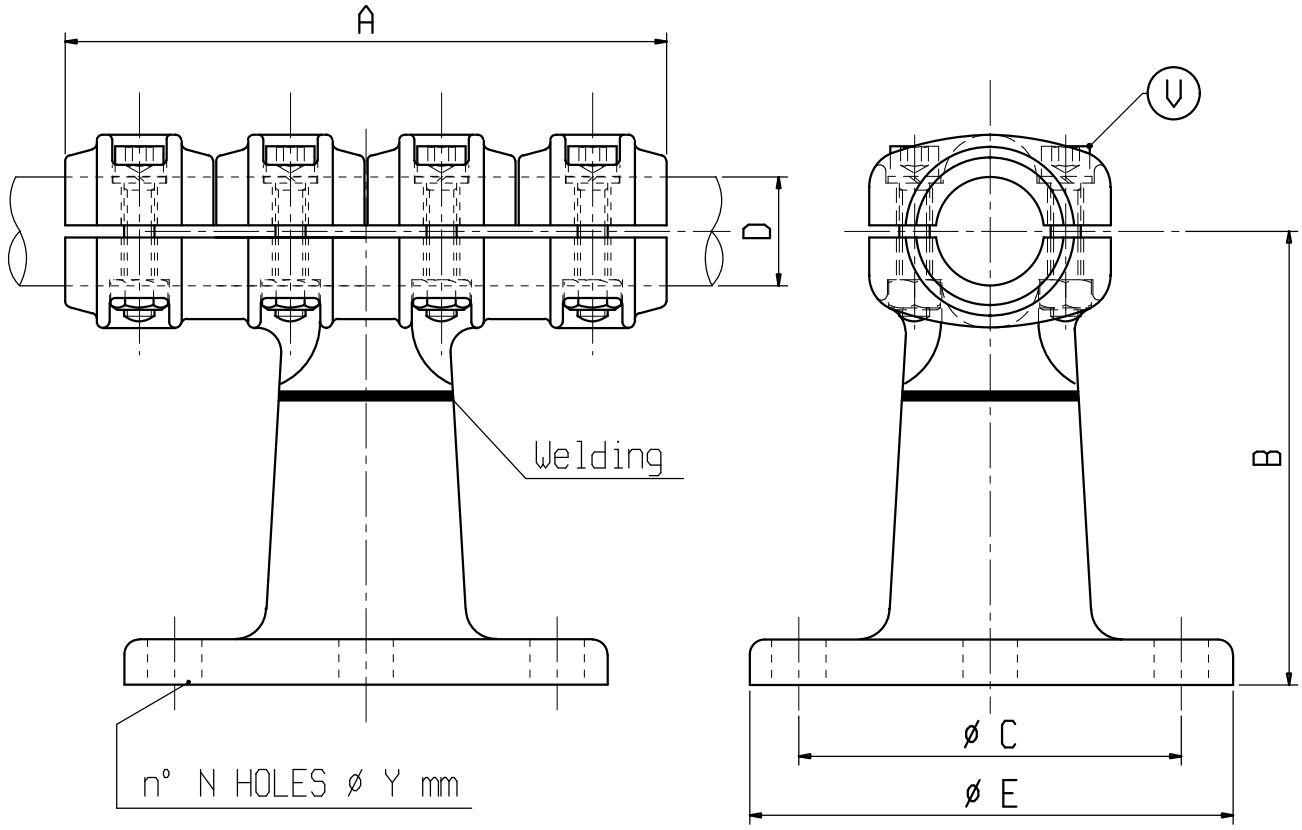

Material: Aluminium alloy

Bolts: Stainless steel

X	ø COND. D	A	B	C	E	N	Y	V	X	ø COND. D	A	B	C	E	N	Y	V
C 6359GAL	12-20	200	110	127	160	8	18	M10	C 1018GAL	36-40	200	150	127	160	8	18	M10
C 6557GAL	20-25	200	110	127	160	8	18	M10									
C 6369GAL	25-32	200	110	127	160	8	18	M10									
C 1017GAL	32-36	200	150	127	160	8	18	M10									