s.r.l. GORLA
MORSETTERIE
MILANO

TECHNICAL OFFICE

BIMETALLIC BUS SUPPORT
FOR Al CONDUCTOR AND PLATE

DRG. N. 29/AB/X

Rev.1 dated 27.10.09

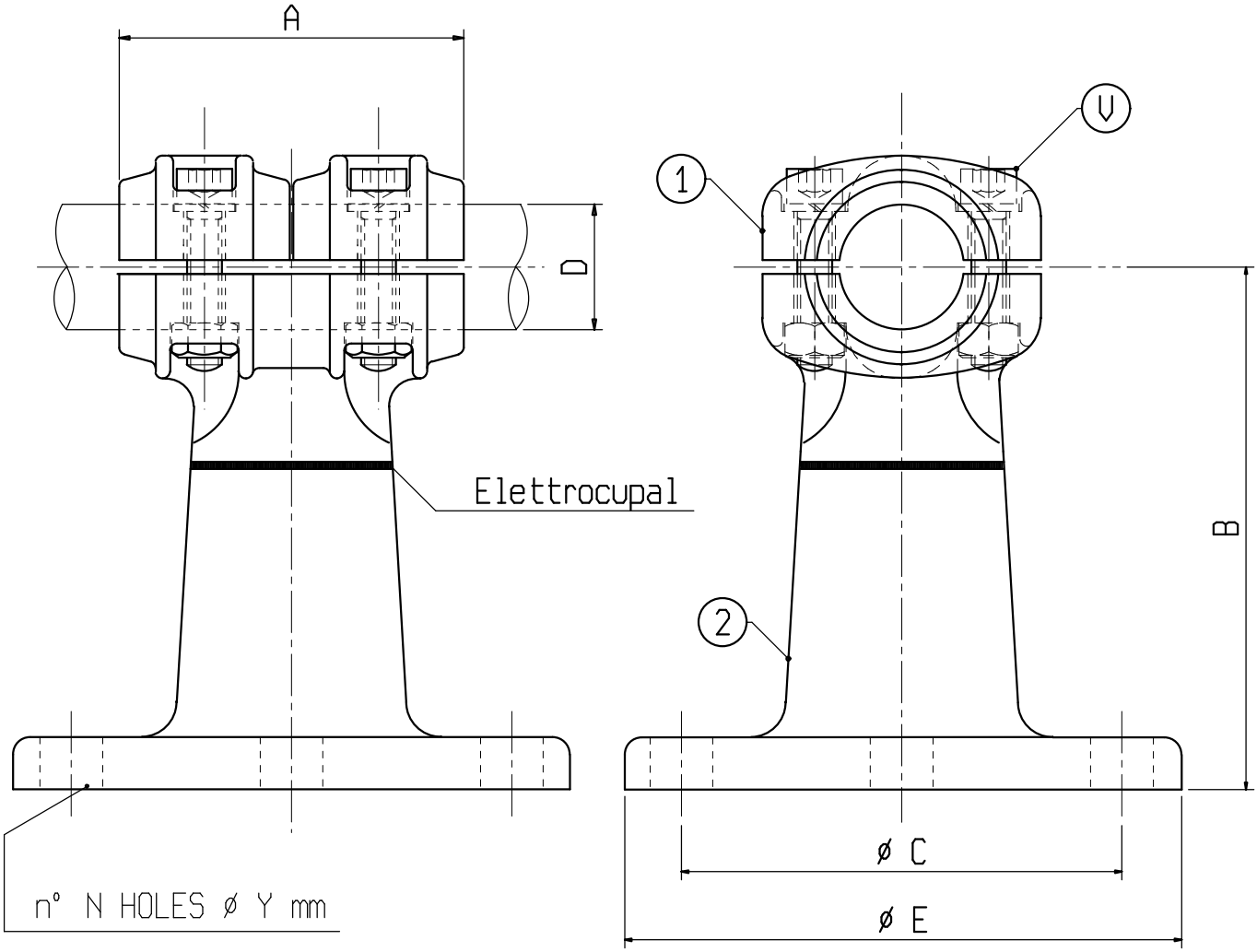

Material: 1 Aluminium alloy; 2 Copper alloy

Bolts: Stainless steel

X	ø COND. D	A	B	C	E	N	Y	V	X	ø COND. D	A	B	C	E	N	Y	V
C 6569AB	12-20	100	110	127	160	8	18	M10	C 6756AB	36-40	100	150	127	160	8	18	M10
C 6555AB	20-25	100	110	127	160	8	18	M10									
C 6583AB	25-32	100	110	127	160	8	18	M10									
C 6468AB	32-36	100	150	127	160	8	18	M10									