s.r.l. GORLA
MORSETTERIE
MILANO

TECHNICAL OFFICE

# BUS SUPPORT
## FOR Al CONDUCTOR AND PLATE

DRG. N. 29/AA/X

Rev.1 dated 24.05.18

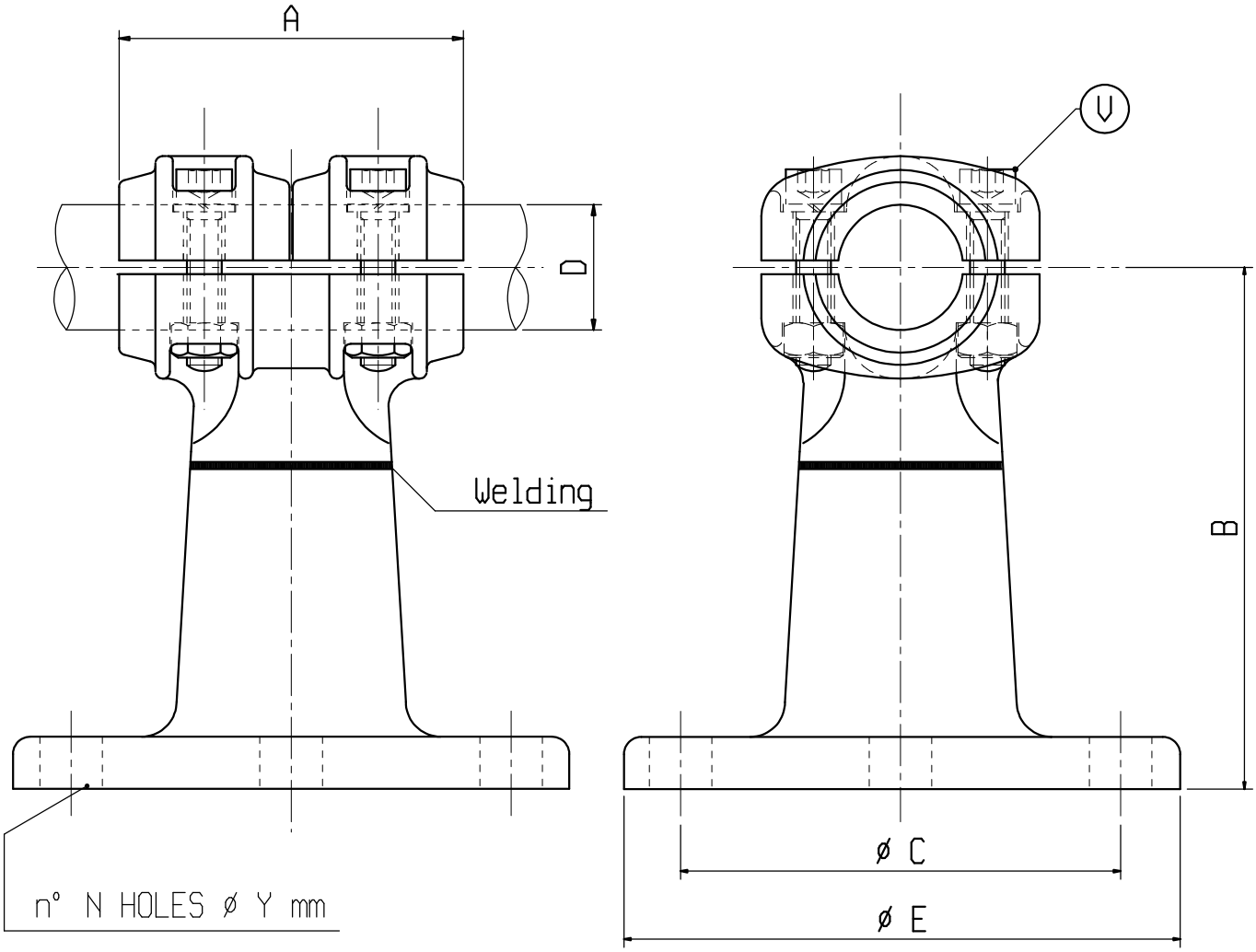


Material: Aluminium alloy
Bolts: Stainless steel

| X | ø COND. D | A | B | C | E | N | Y | V | X | ø COND. D | A | B | C | E | N | Y | V |
|---|---|---|---|---|---|---|---|---|---|---|---|---|---|---|---|---|---|
| C 6569GAL | 12-20 | 100 | 110 | 127 | 160 | 8 | 18 | M10 | C 6756AA | 36-40 | 100 | 150 | 127 | 160 | 8 | 18 | M10 |
| C 6569150GAL | 12-20 | 100 | 150 | 127 | 160 | 8 | 18 | M10 | | | | | | | | | |
| C 6555AA | 20-25 | 100 | 110 | 127 | 160 | 8 | 18 | M10 | | | | | | | | | |
| C 6583AA | 25-32 | 100 | 110 | 127 | 160 | 8 | 18 | M10 | | | | | | | | | |
| C 6468AA | 32-36 | 100 | 150 | 127 | 160 | 8 | 18 | M10 | | | | | | | | | |

s.r.l. GORLA
MORSETTERIE
MILANO

TECHNICAL OFFICE

# BUS SUPPORT
## FOR Al TUBE AND PLATE

DRG. N. 67/AA/X

Rev.1 dated 05.06.09

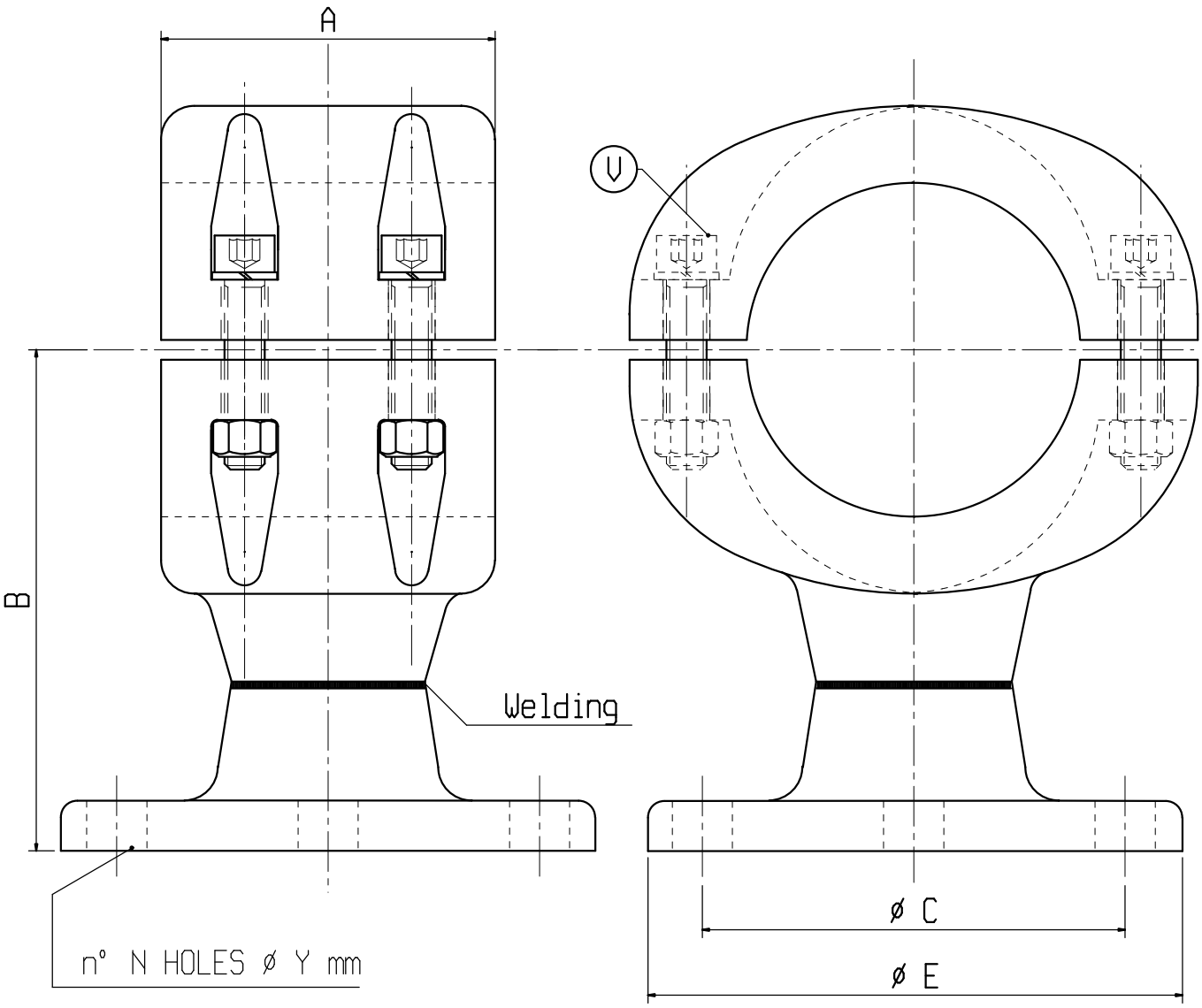


Material: Aluminium alloy
Bolts: Stainless steel

| X | ø COND. D | A | B | C | E | N | Y | V | X | ø COND. D | A | B | C | E | N | Y | V |
|---|---|---|---|---|---|---|---|---|---|---|---|---|---|---|---|---|---|
| C 5990 | 100 | 100 | 150 | 127 | 160 | 8 | 18 | M12 | | | | | | | | | |
| | | | | | | | | | | | | | | | | | |
| | | | | | | | | | | | | | | | | | |
| | | | | | | | | | | | | | | | | | |

s.r.l. GORLA
MORSETTERIE
MILANO

TECHNICAL OFFICE

# BUS SUPPORT
## FOR STRAIGHT CONNECTION
## Al TUBE

DRG. N. 68/AA/X

Rev.1 dated 05.06.09

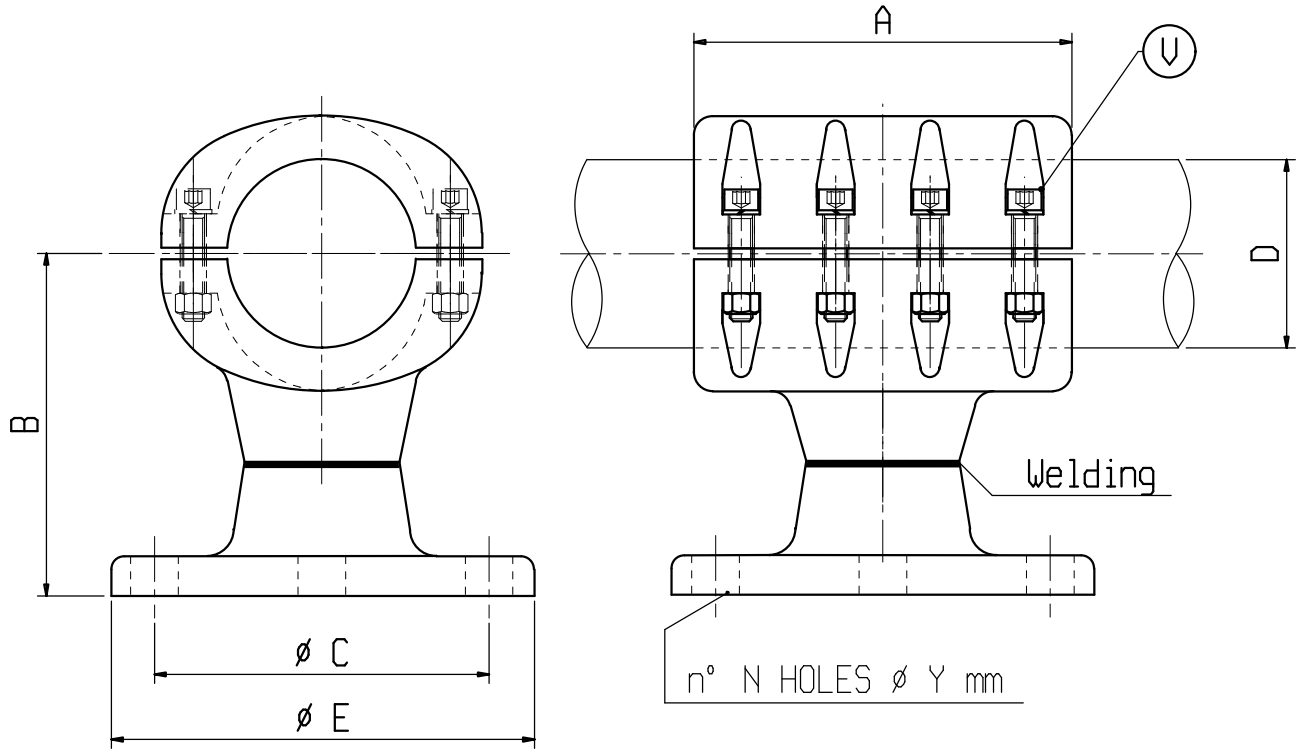


Material: Aluminium alloy
Bolts: Stainless steel

| X | ø COND. D | A | B | C | E | N | Y | V | X | ø COND. D | A | B | C | E | N | Y | V |
|---|---|---|---|---|---|---|---|---|---|---|---|---|---|---|---|---|---|
| C 1245GAL | 70 | 200 | 150 | 127 | 160 | 8 | 18 | M10 | | | | | | | | | |
| C 1187GAL | 100 | 200 | 150 | 127 | 160 | 8 | 18 | M12 | | | | | | | | | |
| | | | | | | | | | | | | | | | | | |
| | | | | | | | | | | | | | | | | | |