s.r.l. GORLA MORSETTERIE MILANO TECHNICAL OFFICE	45° CONNECTOR FOR Al STUD AND Cu FLAT	DRG. N. 28/BA/X SCALE . DRAWN . / DATE . APPROVED . / DATE .

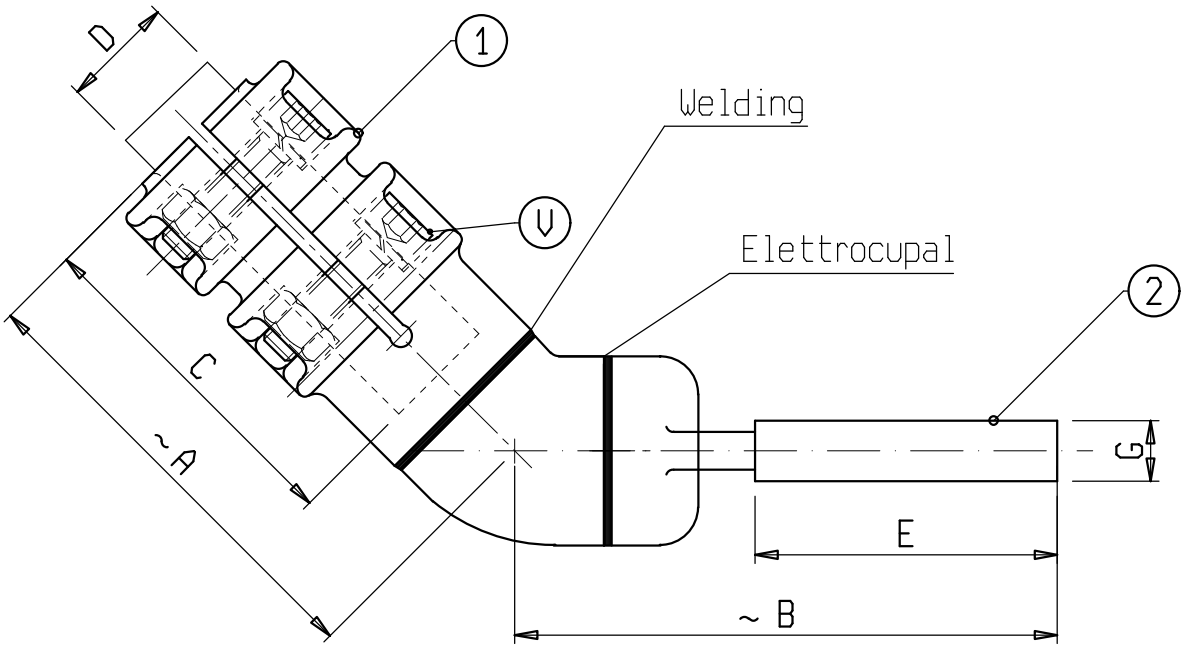

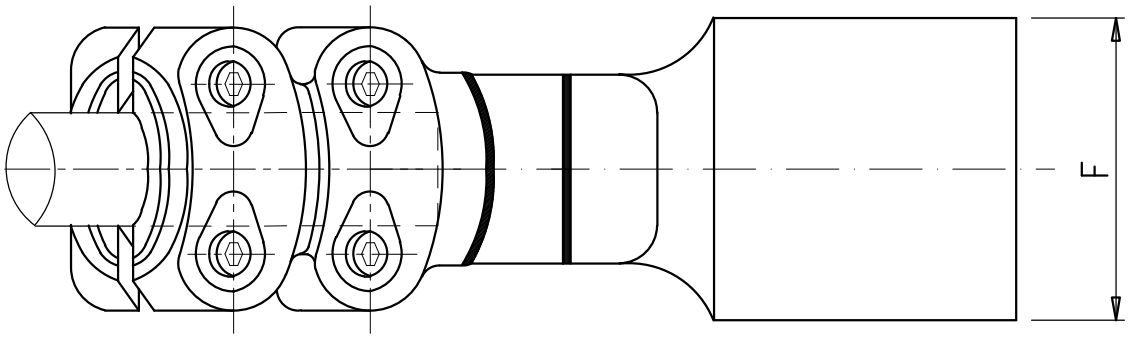

Material: 1 Aluminium alloy 2 Copper alloy

Bolts: Stainless steel

X	ø COND. D	A	B	C	E	F	G	V	X	ø COND. D	A	B	C	E	F	G	V
C 1009BA	20	120	165	80	100	100	10	M10									
C 1010BA	30	120	165	80	100	100	10	M10									
C 1011BA	40	120	145	80	80	80	10	M10									