s.r.l. GORLA
MORSETTERIE
MILANO

TECHNICAL OFFICE

45° CONNECTOR
PER Cu CONDUCTOR
AND Cu FLAT

DRG. N. 27/BB/X

Rev.1 dated 17.10.06

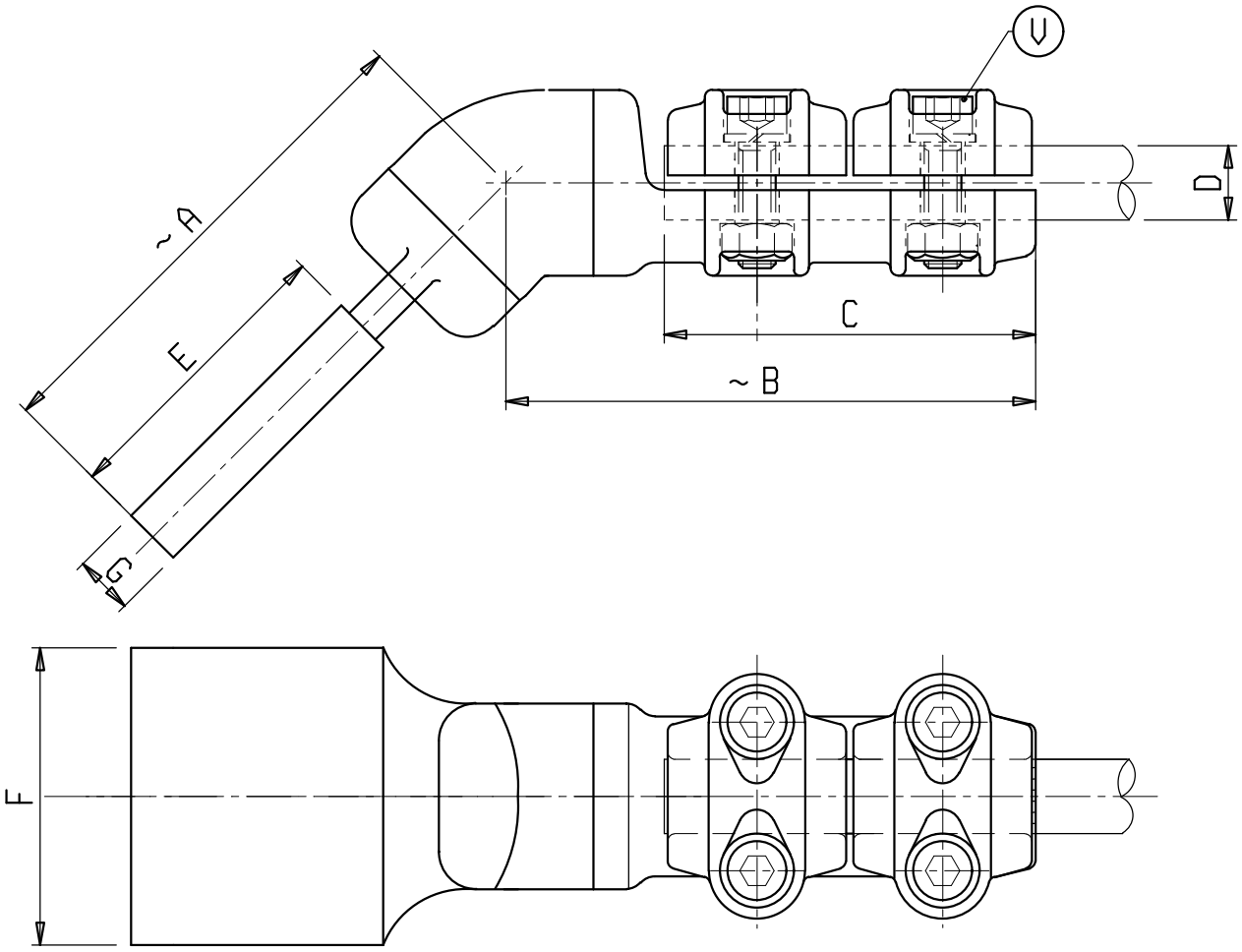

Material: Copper alloy
Bolts: Stainless steel

X	ø COND. D	A	B	C	E	F	G	V	X	ø COND. D	A	B	C	E	F	G	V
C 0966BB	12-20	125	135	100	60	60	6	M10	C 1005BB	25-32	165	135	100	100	100	10	M10
C 0967BB	12-20	145	135	100	80	80	8	M10	C 0194BB	32-36	165	135	100	100	100	16	M10
C 0978BB	12-20	165	135	100	100	100	10	M10	C 1008BB	36-40	145	150	100	80	80	10	M10
C 1000BB	20-25	145	135	100	80	80	8	M10									