s.r.l. GORLA
MORSETTERIE
MILANO

TECHNICAL OFFICE

45° CONNECTOR
FOR Cu CONDUCTOR AND Al FLAT

DRG. N. 27/BA/X

Rev.1 dated 17.10.06

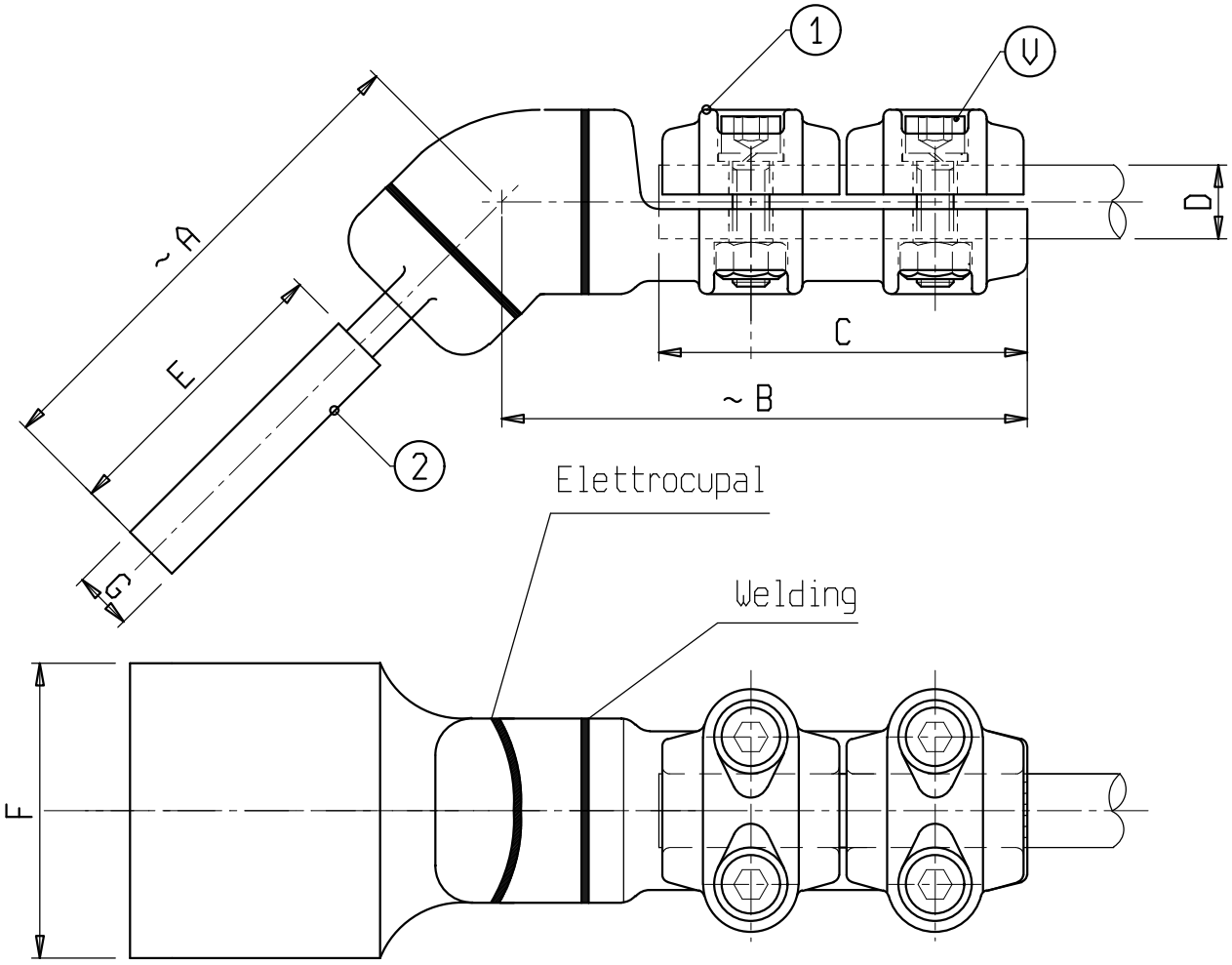

Material: 1 Copper alloy 2 and 3 Aluminium alloy
Bolts: Stainless steel

X	ø COND. D	A	B	C	E	F	G	V	X	ø COND. D	A	B	C	E	F	G	V
C 0966BA	12-20	125	135	100	60	60	6	M10	C 1005BA	25-32	165	135	100	100	100	10	M10
C 0967BA	12-20	145	135	100	80	80	8	M10	C 0194BA	32-36	165	135	100	100	100	16	M10
C 0978BA	12-20	165	135	100	100	100	10	M10	C 1008BA	36-40	145	150	100	80	80	10	M10
C 1000BA	20-25	145	135	100	80	80	8	M10									